MOD: XVC104

Зип Общепит

EXPLODED VIEW
DISEGNO ESPLOSO

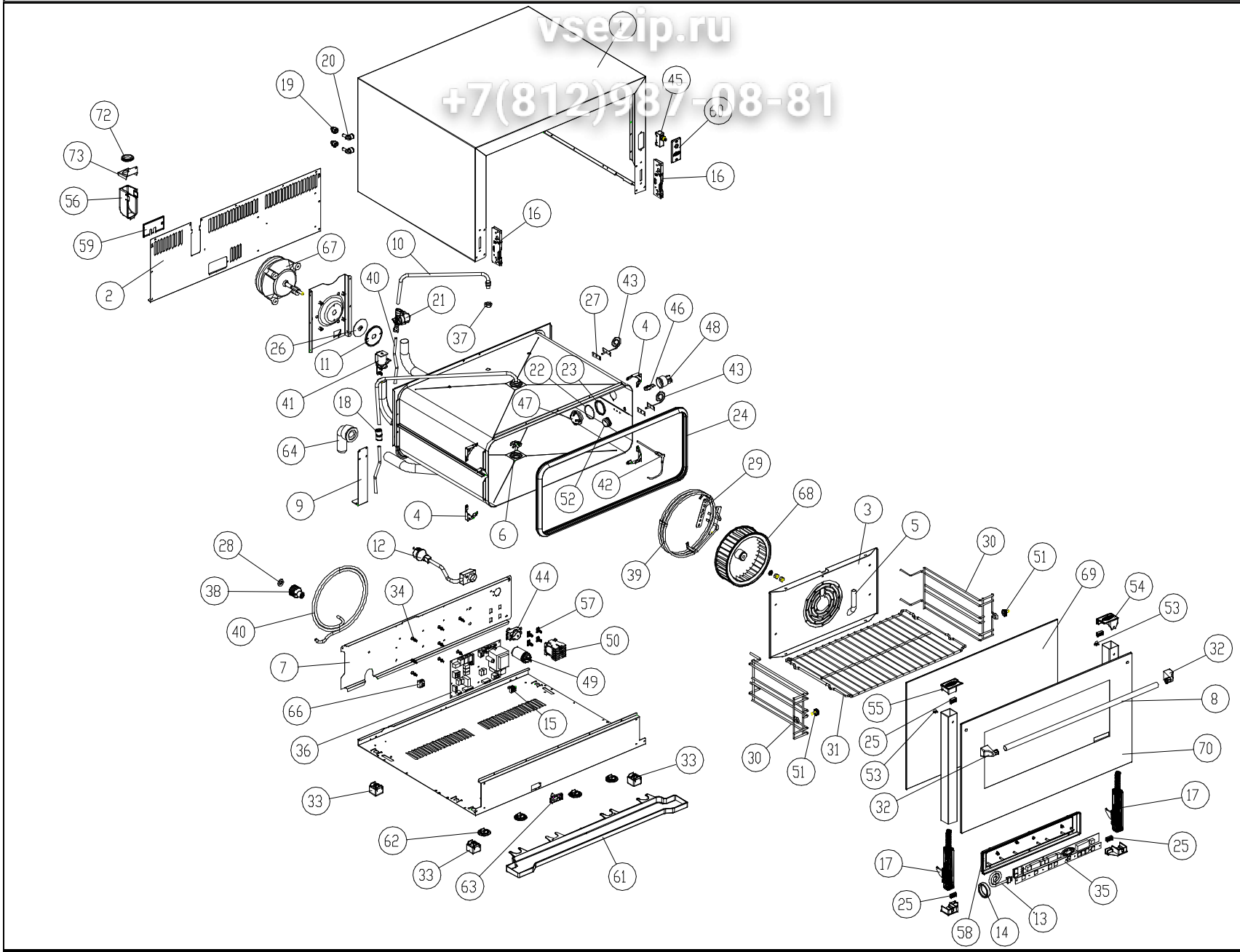

vsezip.ru
+7(812)987-08-81

LEGEND - LEGENDA

1	0D1435A0	56	VM1065A0
2	0F1150A0	57	VM1075A1
3	0G1160A0	60	VM1200A0
4	0H1450A0	61	VM1216B0
5	0H2305A0	62	VM1220A0
6	0H2550A0	63	VM1225A0
7	0H2605A1	64	VM1260A0
8	0H2620B0	66	VM250
9	0H2850A0	67	VN1000B0
10	0H3015A1	68	VN1025A2
11	0H3020A0	69	VT1120B0
12	CE116	70	VT1121A1
13	CE1280A0	72	GN1045A0
14	CE1285A0	73	0H3041A0
15	CE1290A0		
16	CR1000A0		
17	CR1050A1		
18	EL1055A0		
19	EL1185A0		
20	EL1195A0		
21	EL1251A0		
22	GN1055A0		
23	GN1065A1		
24	GN1110A2		
25	GN1265A0		
26	GN1140A0		
27	GN1285A0		
28	GN1200A0		
29	GN224		
30	GRL1075A0		
31	GRP805		
32	MG1015B0		
33	PD1001A0		
34	PE102		
35	PE1610A2		
36	PE1365C2		
37	RC1170A1		
38	RC1210A0		
39	RS1090A1		
40	TB008		
41	VE1135A0		
42	TR1040A1		
43	TR1095A0		
44	TR254		
45	VE1295A0		
46	VE1005A2		
47	VT1195A0		
48	VE1015A1		
49	VE221		
50	VE1115A0		
51	VI1035A1		
52	VI1515A1		
53	VM1025A0		
54	VM1045B0		
55	VM1046B0		

MOD: XVC104

Зип Общепит

EXPLODED VIEW
DISEGNO ESPLOSO

vsezip.ru
(812) 307-08-81

DESCRIZIONE CODICI

1	0D1435A0	MANTELLO INOX XVC104
2	0F1150A0	SCHIENA INOX XVC104
3	0G1160A0	CARTER ARIA INOX XVC104
4	0H1450A0	ANGOLO FACCIATA MUFFOLA INOX XB-XV-XG
5	0H2305A0	TUBO INTERNO UMIDITA D=16 Sp=1
6	0H2550A0	TAPPO PER TUBO DI SCARICO INOX C.T.
7	0H2605A1	PROFILO PORTA COMPONENTI INOX XVC104
8	0H2620B0	TUBO MANIGLIA D-EST=18 SP=1 L=668
9	0H2850A0	STAFFA SOSTEGNO MUFFOLA INOX XVC054/104
10	0H3015A1	TUBO ESTERNO UMIDITA+RACCORDO SALDATO
11	0H3020A0	DISCO TENUTA ALBERO MOTORE INOX
12	CE116	CAVO 3x1,5 H07RN-F MT1,5+K1/3+SCHUK
13	CE1280A0	CAVO COLLEGAMENTO POTENZA CONTROLLO
14	CE1285A0	FERRITE EMI ROUND MOD. 2643801502
15	CE1290A0	MORSETTO FEMMINA ESTRAIBILE CPF 5/4
16	CR1000A0	ATTACCO CERNIERA PORTA FORNO RIBALTA
17	CR1050A1	CERNIERA PORTA FORNO RIBALTA XVC104-LM
18	EL1055A0	RIDUZIONE J.G. DA D=10 A D=8 PM201008E
19	EL1185A0	RACCORDO A GOMITO J.GUEST Ø8 - Ø8
20	EL1195A0	RACCORDO A GOMITO CON J.GUEST
21	EL1251A0	ELETTROVALVOLA H2O 1 VIA RID.
22	GN1055A0	OR 46x2 VMQ 70 ROSSO
23	GN1065A1	GUARNIZIONE PORTALAMPADA DE=53.2
24	GN1110A2	GUARNIZIONE PORTA PROFILO 248
25	GN1265A0	GUARNIZIONE VETRO INTERNO XVC054/104
26	GN1140A0	GUARNIZIONE PORTAMOTORE STAMP.
27	GN1285A0	GUARNIZIONE SONDA DI TEMPERATURA NTC
28	GN1200A0	GUARNIZIONE D=24 RACCORDO 3/4 GOMMA+RETE
29	GN224	GUARN.PTFE+CARB 100x22x0,8sp-c/fori 1999
30	GRL1075A0	GRIGLIA LATERALE DX/SX INOX 3
31	GRP805	GRIGLIA GN1/1 PIANA INOX BRILLANTATA
32	MG1015B0	TERMINALE MANIGLIA L.M.
33	PD1001A0	PIEDINO 35X35 H26 PLASTICA+GOMMA GRIGIO
34	PE102	SUPPORTO PER SCHEDA 24POT98
35	PE1610A2	ASSIEME SCHEDA CONTR. PE1355D2
36	PE1365C2	SCHEDA POTENZA FORNI COMBINATI
37	RC1170A1	DADO M14 H=8 CH=22 INOX
38	RC1210A0	RACCORDO 3/4 FEMM. - J.GUEST Ø8
39	RS1090A1	RESISTENZA CIRCOLARE D=230 3 SPIRE
40	TB008	TUBO PE 7,93x4,75 TRASPARENTE
41	VE1135A0	ATTUATORE VENTURI 220V 50/60 Hz SERIE 2
42	TR1040A1	SONDA AL CUORE STAMPATA L=1320
43	TR1095A0	SONDA TEMPERATURA NTC 150 L=1050
44	TR254	TERM.SIC.BIP.335°C RIARMO MANUALE
45	VE1295A0	MICROINTERRUTTORE PORTA MK 16A 230V UL
46	VE1005A2	LAMPADA HALOPIN ES H66733ES 33W
47	VT1195A0	VETRO COPRILAMPADA BOROSILICATO TEMPRATO
48	VE1015A1	PORTA LAMPADA SERIE 2 PER LAMPADA
49	VE221	CONDENS.ICAR PRL 5uF 450V FASTON
50	VE1115A0	MINICONTATTORE QUADRIPOLARE 20 A 230 V
51	VI1035A1	NOTTOLINO M6x12,5 CON TAGLIO OTT.CROM.FE
52	VI1515A1	SUPPORTO SONDA AL CUORE CON CAVA
53	VM1025A0	TAPPO NYLON PA66 V2 GRIGIO Ø16
54	VM1045B0	TAPPO SUP. DX COLONNINA PORTA
55	VM1046B0	TAPPO SUP. SX COLONNINA PORTA
56	VM1065A0	CUFFIA COPRI CAMINO FUMI L.M.
57	VM1075A1	CLIP DI FISSAGGIO PER TELERUTTORI
60	VM1200A0	PIASTRINA SUPPORTO MICROPORTA MECCANICO
61	VM1216B0	CASSETTO RACCOGLIGOCCE XVC104/304/504/704
62	VM1220A0	CLIP FISSAGGIO CASSETTO RACCOGLIGOCCE
63	VM1225A0	PIASTRINA PASSACAVO CONTROLLO
64	VM1260A0	CURVA A 90° RACCORDO SCARICO
66	VM250	MORSETT.A PETTINE
67	VN1000B0	MOTORE COND.5uF 200W ALB.M8 CONN.5 POLI
68	VN1025A2	VENTOLA D=196 H=61 38 PALE INOX DADO M8
69	VT1120B0	VETRO INTERNO 665X415X6 BETFL XVC104
70	VT1121A1	VETRO ESTERNO SER. 748X424X5 CTFL XVC104
72	GN1045A0	GUARN.ANTIVIBR. CAMINO-SCARICO
73	0H3041A0	PROFILO COPRICAMINO INOX XVC054/104

DESCRIPTION

1	0D1435A0	STAINLESS STEEL OUTER CASING XVC104
2	0F1150A0	XVC104 STAINLESS STEEL BACK PANEL
3	0G1160A0	XVC104 STAINLESS STEEL FAN GUARD PANEL
4	0H1450A0	STAINLESS STEEL MUFFLE FRONT FACE
5	0H2305A0	INTERNAL WATER PIPE D=16 Sp=1
6	0H2550A0	STAINLESS STEEL COVER FOR DRAIN
7	0H2605A1	
8	0H2620B0	
9	0H2850A0	ZINCED MUFFLE SUPPORT BRACKET XVC054/104
10	0H3015A1	
11	0H3020A0	STAINLESS STEEL SEALING DISC FOR MOTOR
12	CE116	EL.CABLE 3x1.5 H07RN-F MT1,5+K1/3+SCHUKO
13	CE1280A0	CABLE TO CONNECT POWER-CONTROL
14	CE1285A0	EMI ROUND FERRITE MOD.2643801502
15	CE1290A0	EXTRACTABLE FEMALE TERMINAL CPF 5/4
16	CR1000A0	HINGE LATCH L.M.
17	CR1050A1	DOOR HINGE XVC104-LM ROSSELLA
18	EL1055A0	STRAIGHT REDUCTION FROM D=10 TO
19	EL1185A0	ELBOW CONNECTION J. GUEST Ø8 - Ø8
20	EL1195A0	ELBOW UNION WITH J.GUEST TERMINAL
21	EL1251A0	1-WAY WATER SOLENOID VALVE BROWN
22	GN1055A0	OR 46x2 VMQ 70 RED
23	GN1065A1	SEAL FOR LAMP GLASS COVER (PURE
24	GN1110A2	DOOR GASKET PROFILE 248 LINE MISS-XCH030
25	GN1265A0	INTERNAL GLASS SEAL XVC054/104
26	GN1140A0	MOTOR GASKET
27	GN1285A0	
28	GN1200A0	3/4 CONNECTION SEAL D=24 RUBBER+NET
29	GN224	PTFE+CARB 100x22x0,8sp-w/holes
30	GRL1075A0	RIGHT/LEFT LATERAL GRID STAINLESS
31	GRP805	GRID GN1/1 FLAT STAINLESS STEEL POLISHED
32	MG1015B0	HANDLE END L.M.
33	PD1001A0	FOOT 35X35 H26 GREY PLASTIC+RUBBER
34	PE102	SUPPORT FOR CARD 24POT98
35	PE1610A2	CONTROL BOARD PE1355 + BOARD COVER
36	PE1365C2	
37	RC1170A1	STAINLESS STEEL NUT M14 H=8 CH=22
38	RC1210A0	Ø8 J.GUEST 3/4 FEMALE CONNECTION
39	RS1090A1	CIRC.HEAT. ELEMENT D=230 3 TURNS
40	TB008	TRANSPARENT TUBE PE 7,93x4,75
41	VE1135A0	VENTURI ACTUATOR 220 V 50/60 Hz SERIES 2
42	TR1040A1	MOLDED CORE PROBE L=1320
43	TR1095A0	TEMPERATURE PROBE NTC 150 L=1050
44	TR254	SECURITY THERMOSTAT BIP. 335°C
45	VE1295A0	DOOR MICROSWITCH MK 16A 230V UL
46	VE1005A2	HALOGEN LAMP 33W ENERGY SAVER
47	VT1195A0	
48	VE1015A1	LAMP HOLDER SERIE 2 FOR HALOGEN LAMP
49	VE221	ICAR CONDENSER PRL 5uF 450V FASTON
50	VE1115A0	MINICONTACTOR WITH 4 POLES 20 A 230 V
51	VI1035A1	CHROMIUM PLATED BRASS NUT M6x12,5
52	VI1515A1	STAINLESS STEEL CORE PROBE SUPPORT
53	VM1025A0	NYLON LID PA66 V2 GREY Ø16
54	VM1045B0	RIGHT UPPER LID FOR COLUMN FOR
55	VM1046B0	LEFT UPPER LID FOR COLUMN FOR
56	VM1065A0	PLASTIC COVER FOR FUMES CHIMNEY L.M.
57	VM1075A1	PLASTIC CLIP TO FIX CONTACTORS
60	VM1200A0	DOOR MECHANIC MICROSWITCH SUPPORT PLATE
61	VM1216B0	DRIP TRAY XVC304/504/704
62	VM1220A0	CLIP TO FIX DRIP TRAY C.T.
63	VM1225A0	PLATE WITH HOLES FOR ELECTRONIC
64	VM1260A0	90°C CURVED DRAIN PIPE
66	VM250	"COMB" TERMINAL BOARD
67	VN1000B0	MOTOR COND.5uF 200W ALB.M8 CONN.5
68	VN1025A2	FAN D=196 H=61 38 BLADES STAINLESS
69	VT1120B0	INTERNAL GLASS 665X414X6 BETFL XVC104
70	VT1121A1	SERIGR. EXTERNAL GLASS 748X424X5 XVC104
72	GN1045A0	ANTIVIBR.SEAL FOR EXHAUST CHIMNEY
73	0H3041A0	STAINLESS STEEL CHIMNEY COVER XVC054/104

Зип Общепит

EXPLODED VIEW
DISEGNO ESPLOSO

vsezip.ru

+7(812)987-08-81