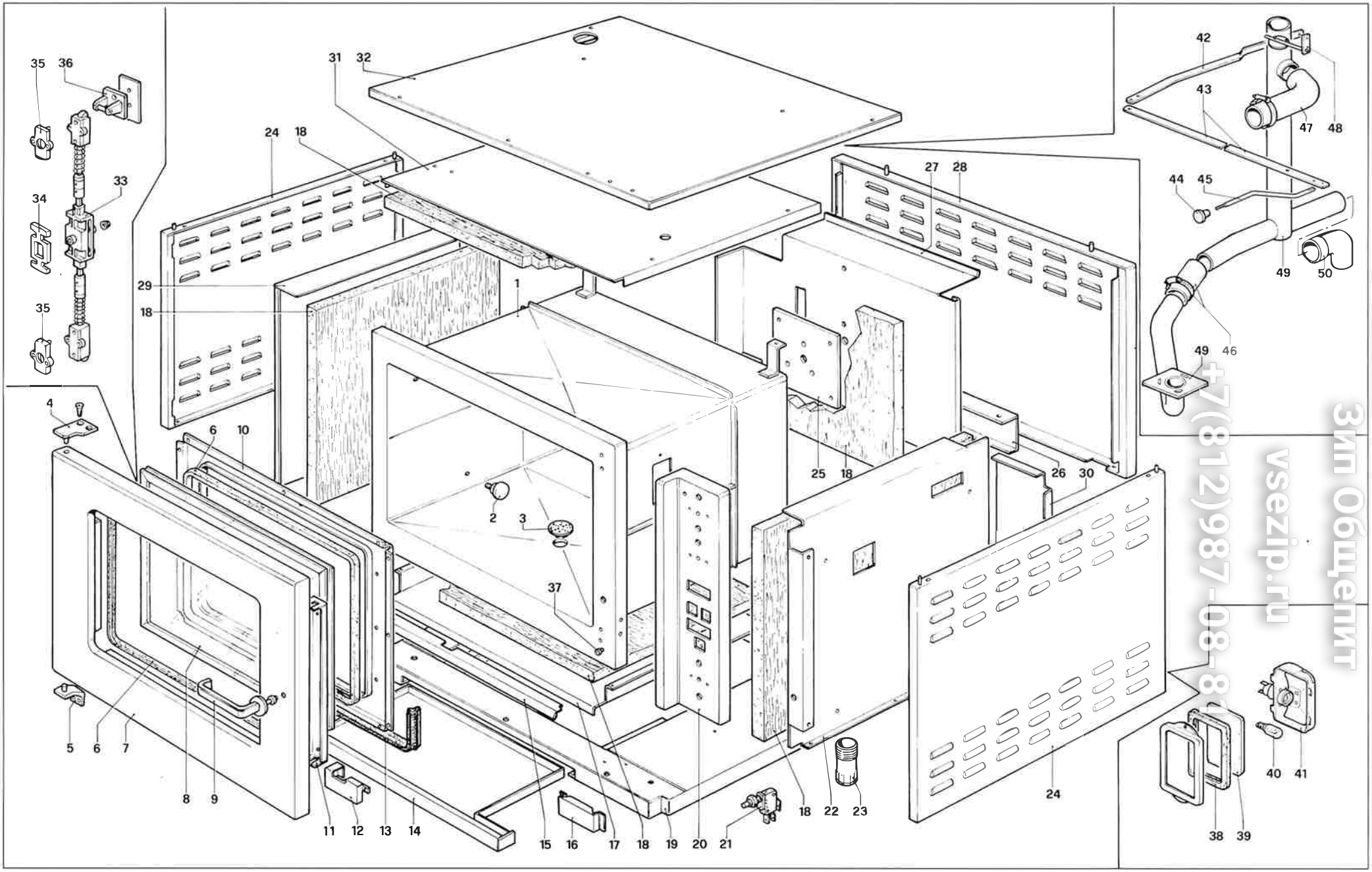

Зип Общепит
vsezip.ru
+7(812)987-08-8

TAV. 201 **STRUTTURA** STRUCTURE *STRUCTURE* STRUKTUR

Зип Общепит
vsezip.ru
+7 (812) 987-08-84

	Codice	Denominazione	Denomination	*Denomination*	Bezeichnung	FEC060	FEP050	FEM060/061
1	GAFOC00009	**Cassone forno**	Caisson du four	*Oven body*	Ofenschublade	●	●	●
2	RTCU700002	**Attacco griglia laterale**	Attaque latérale	*Lateral connection*	Seitenanschluss	●	●	●
3	PAFOC00051	**Disco scarico condensa**	Disque évacuation condensation	*Moisture drain disk*	Kondenswasserablasscheibe	●	●	●
4	GAFOC00030	**Cerniera superiore porta**	Charnière supérieure	*Upper hinge*	Linke Türangel	●	●	●
5	GAFOC00031	**Cerniera inferiore porta**	Charnière inférieure	*Lower door hinge*	Untere Türangel	●	●	●
6	MPGOM03P00	**Guarnizione vetro porta**	Guarniture porte	*Oven door gasket*	Türdichtung	●	●	●
7	GAFOC00001	**Porta forno**	Porte du four	*Oven door*	Ofentür	●	●	●
8	RTFOC00008	**Cristallo porta forno**	Verre porte four	*Oven door glass*	Ofentürglas	●	●	●
9	RTFOC00007	**Maniglia serratura**	Poignée porte four	*Oven door handle*	Ofentürgriff	●	●	●
10	PAFOC00008	**Controporta forno**	Contre porte du four	*Oven counter door*	Gegentür	●	●	●
11	PAFOC000007	**Protezione serratura porta**	Protection de la serrure	*Lock guard*	Schlosschutz	●	●	●
12	PAFOC00039	**Prolunga sinistra facciata**	Rallonge gauche facade	*Left facade extension*	Verlängerung Linke Front	●	●	●
13	RTFOC00094	**Guarnizione porta forno**	Guarniture porte du four	*Oven door gasket*	Türdichtung	●	●	●
14	GAFOC00048	**Cassetto**	Tiroir	*Drawer*	Kasten	●	●	●
15	PAFOC00181	**Traversa antigoccia**	Traverse anti-goutte	*Anti-drip crosspiece*	Tropfschutzquerstange	●	●	●
16	PAFOC00038	**Prolunga destra facciata**	Rallonge droite facade	*Right facade extension*	Verlangerung Rechte Front	●	●	●
17	PAFOC00025	**Coprilana inferiore**	Pannean couvre isolant	*Insulating panel cover*	Isoliermaterialverkleidung	●	●	●
18	PACU800150	**Pannello isolante**	Panneau isolant	*Insulating panel*	Isoliertafel	●	●	●
19	GAFOC00040	**Basamento**	Soubassement	*Base*	Untergestel	●	●	●
20	GAFOC00032	**Cruscotto**	Panneau de contrôle	*Control panel*	Stirnbrett	●	●	●
21	RTFOC00035	**Microinterruttore**	Microswitch	*Microswitch*	Microswitch	●	●	●
22	PAFOC00023	**Coprilana destro**	Panneau couvre isolant	*Insulating panel cover*	Isoliermaterialverkleidung	●	●	●
23	RTFOC00051	**Piedino**	Pied	*Foot*	Inos-Fuss	●	●	●
24	PAFOC00035	**Fianco inox**	Côté inox	*Inox side*	Inox-Seite	●	●	●
25	GAFOC00019	**Supporto ventola**	Support ventilateur	*Fan support*	Lautradsupport	●	●	●
26	PAFOC00026	**Coprilana inf. posteriore**	Panneau couvre isolant	*Insulating panel cover*	Isoliermaterialverkleidung	●	●	●
27	PAFOC00024	**Coprilana posteriore**	Panneau couvre isolant	*Insulating panel cover*	Isoliermaterialverkleidung	●	●	●
28	PAFOC00036	**Posteriore inox**	Panneau postérieur inox	*Inox back panel*	Inox-Ruckwand	●	●	●
29	PAFOC00022	**Coprilana sinistro**	Panneau couvre isolant	*Insulating panel cover*	Isoliermaterialverkleidung	●	●	●
30	PAFOC00136	**Protezione comp. elettrici**	Protection composant électriques	*Electrical components guard*	Schutz elektrischen Komponenten	●	●	●
31	PAFOC00140	**Coprilana superiore**	Panneau couvre isolant	*Insulating panel cover*	Isoliermaterialverkleidung	●	●	●
32	GAFOC00037	**Coperchio**	Couvercle	*Cover*	Topfdeckel	●	●	
32	GAFOC00091	**Coperchio**	Couvercle	*Cover*	Topfdeckel			●
33	GAFOC00005	**Serratura porta forno**	Serrure porte four	*Over door lock*	Ofentürschloss	●	●	●
34	RTFOC00057	**Zoccolo centrale serratura**	Prise centrale serrure	*Central connection lock*	Mittlerer Anschluss	●	●	●
35	RTFOC00005	**Zoccolo esterno serratura**	Prise extérieure serrure	*External connection lock*	Ausserer Anschluss	●	●	●
36	RTFOC00009	**Gancio fisso serratura**	Crochet fixe de la serrure	*Lock fixed hook*	Fester Schlossnaken	●	●	●
37	RTBF800021	**Gommino porta forno**	Bouchon de la porte	*Door rubber cap*	Türgummi	●	●	●
38	RTFOC00202	**Guarnizione portalampada**	Garniture	*Gasket*	Dichtung	●	●	●
39	RTFOC00201	**Vetro portalampada**	Verre protège ampoule	*Lamp-holden glass*	Leuchtenhalterungslas	●	●	●
40	RTFOC00037	**Lampada 25W 220V.**	Ampoule 25W 220V	*Lamp 25W 220V*	Leuchte 25W 220V	●	●	●
41	RTFOC00036	**Portalampada**	Douille	*Lamp-holder*	Leuchtenhalterung	●	●	●
42	RTFOC00060	**Asta posteriore scarico cond.**	Antenne arriere	*Rear rod*	Hinterere stange	●	●	●
43	RTFOC00061	**Asta trasversale scarico cond.**	Antenne transversale	*Transverse rod*	Querstange	●	●	●
44	RTFOC00056	**Manopola scarico condensa**	Manette évacuation condens.	*Moisture drain knob*	Drehknopf Kondenswasserablass	●	●	●
45	RTFOC00062	**Asta anteriore scarico cond.**	Antenne avant	*Frontrod*	Vordere stange	●	●	●
46	RTFOC00116	**Tubo di collegamento infer.**	Tuyan de branchement inférieur	*Lower connection hose*	Unteres Verbindungsrohr	●	●	●
47	RTFOC00117	**Tubo di collegamento poster.**	Tuyan de branchement postérieur	*Rear connection hose*	Hinteres Verbindungsrohr	●	●	●
48	RTFOC00059	**Asta posteriore scarico cond.**	Antenne arriere	*Rear rod*	Hinterere stange	●	●	●
49	RTFOC00052	**Rampa scarico condensa**	Rampe évacuation condensation	*Moisture drain ramp*	Kondenswasserblassrampe	●	●	
49	RTFOC00152	**Rampa scarico condensa**	Rampe évacuation condensation	Moisture drain ramp	Kondenswasserblassrampe			●
50	RTFOC00124	**Gomito scarico condensa**	Coude évacuation condensation	*Moisture drain elbow*	Kondenswasserblasskniestück	●	●	●

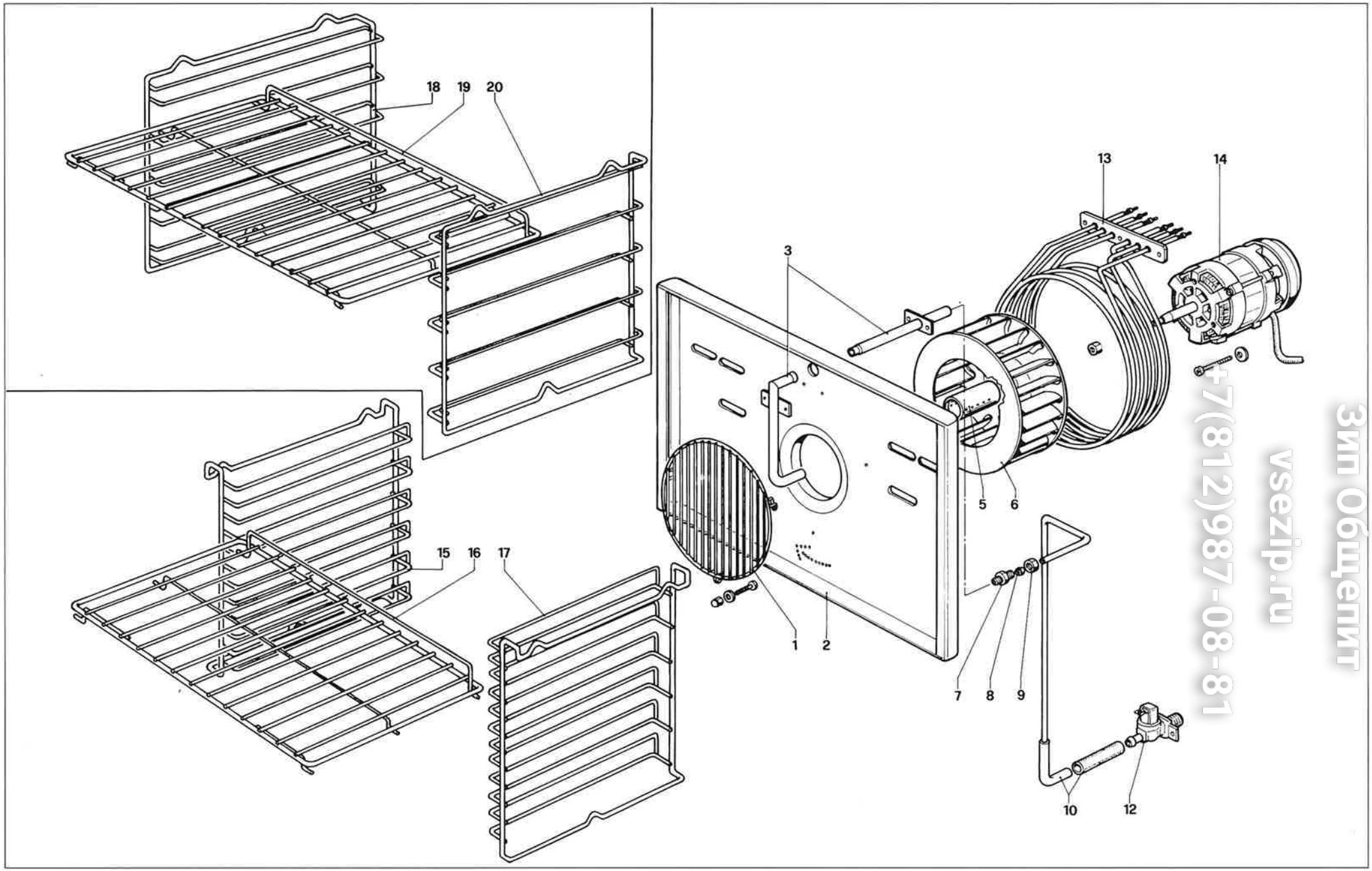

Зип Общепит
vsezip.ru
+7(812)987-08-81

TAV. 202 GRIGLIE E VENTILAZIONE GRILLES ET VENTILATION *GRILLES AND VENTILATION* GITTER UND BELÜFTUNG

зип Общепит
vsezip.ru
+7(812)987-08-81

	Codice	Denominazione	Denomination	*Denomination*	Bezeichnung	FEC060	FEP050	FEM060/061
1	RTFOC00014	**Griglia protezione ventilatore**	Grille ventilateur	*Fan grille*	Ventilatorgitter	●	●	●
2	GAFOC00020	**Convogliatore aria**	Coiffe ventilateur air	*Air duct*	Luftförderer	●	●	●
3	RTFOC00018	**Umidificatore**	Humidificateur	*Humidifier*	Befeuchter	●	●	●
5	RTFOC00155	**Nebulizzatore**	Nébulisateur	*Atomizer*	Zerstäuber	●	●	●
6	RTFOC00012	**Girante ventilatore**	Couronne mobile ventilateur	*Fan wheel*	Ventilatorlau frad	●	●	●
7	RTFOC00019	**Iniettore umidificatore**	Injecteur humidificateur	*Injecteur for humidifier*	Einspritzer für Befencter	●	●	●
8	RTCU800183	**Bicono Ø 6**	Bicone pour tube Ø 6	*Bicone for pipe Ø 6*	Zweikegel Ø 6	●	●	●
9	RTFOC00020	**Calotta per tubo Ø 6**	Ecron pour tube Ø 6	*Nut for pipe Ø 6*	Mutter für Schlauch Ø 6	●	●	●
10	RTFOC00021	**Tubo alimentazione umidificatore**	Tube alimentation	*Feeding pipe*	Versorgungsrohr	●	●	●
12	RTFOC00022	**Elettrovalvola**	Electrovanne	*Solenoid valve*	E-Ventil	●	●	●
13	RTFOC00013	**Resistenza elettr. 9 Kw. 230 V.**	Resistance elect. 9000 W 240 V.	*Over heating elect. 9000 W 240 V.*	Elektr. Widerstand 9000 W 240 V.	●	●	●
14	RTFOC00011	**Motore elettrico**	Moteur électrique	*Electric motor*	E-Motor	●	●	●
15	RTFOC00015	**Griglia laterale sinistra**	Grille letérale gauche	*Left lateral grate*	Linke Seitenrost	●		
15	RTFOC00177	**Griglia laterale sinistra (FEM060)**	Grille latérale gauche (FEM060)	*Left lateral grate (FEM060)*	Linke Seitenrost (FEM060)			●
15	RTFOC00180	**Griglia laterale sinistra (FEM061)**	Grille latérale gauche (FEM061)	*Left lateral grate (FEM061)*	Linke Seitenrost (FEM061)			●
16	RTFOC00017	**Griglia forno**	Grille du four	*Oven grate*	Ofenrost	●		
16	RTFOC00175	**Griglia forno**	Grille du four	*Oven grate*	Ofenrost			●
17	RTFOC00016	**Griglia laterale destra**	Grille latérale droite	*Right lateral grate*	Rechte Seitenrost	●		
17	RTFOC00176	**Griglia laterale destra**	Grille latérale droite	*Right lateral grate*	Rechte Seitenrost			●
18	RTFOC00081	**Griglia laterale sinistra**	Grille latérale gauche	*Left lateral grate*	Linke Seitenrost		●	
19	RTFOC00083	**Griglia forno**	Grille du four	*Oven grate*	Ofenrost		●	
20	RTFOC00082	**Griglia laterale destra**	Grille latérale droite	*Right lateral grate*	Rechte Seitenrost		●	

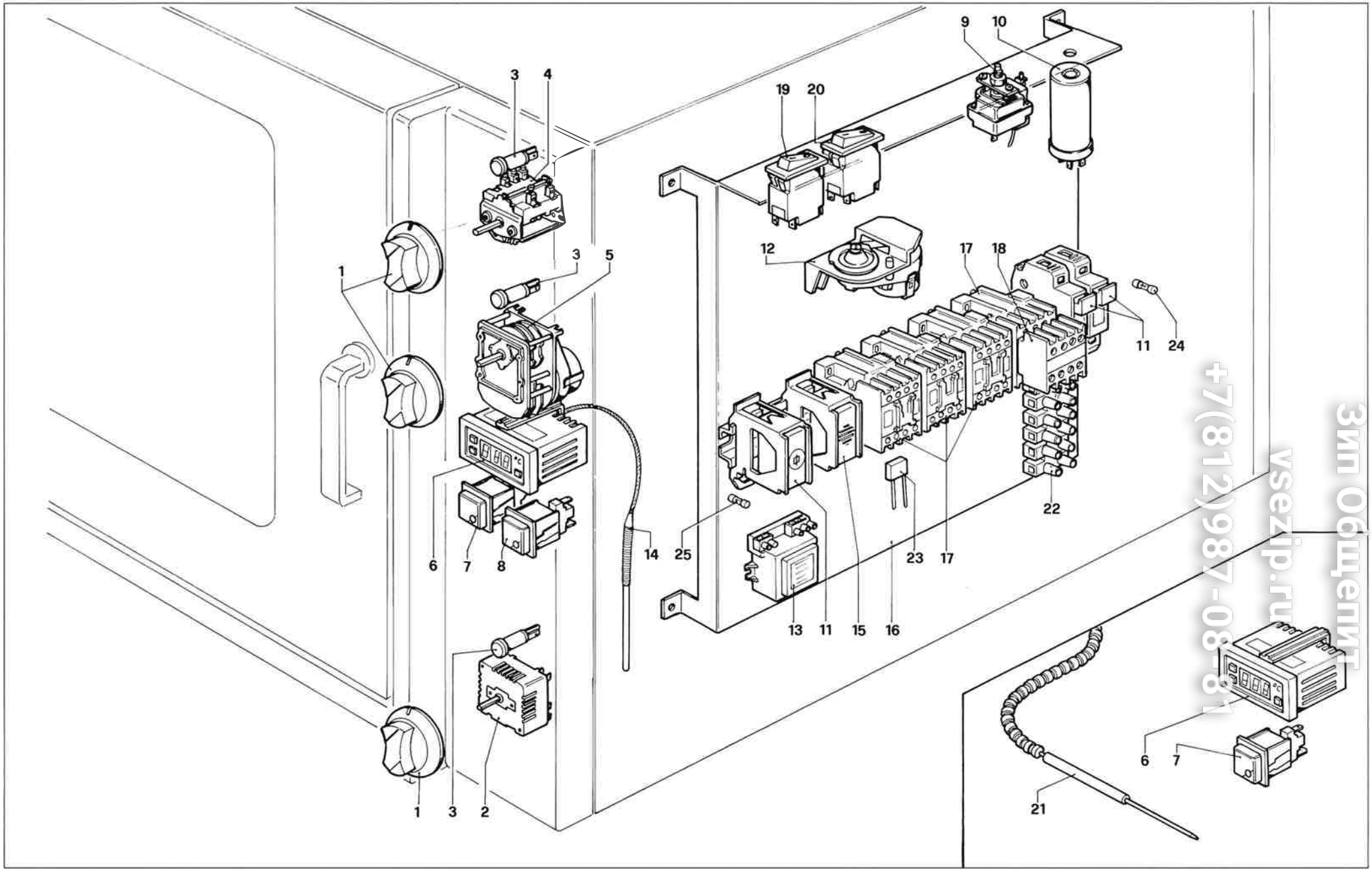

Зип Общепит
vsezip.ru
+7(812)987-08-81

TAV. 203 APPARECCHIATURE ELETTRICHE APPAREILLAGES ÉLECTRIQUES *ELECTRICAL EQUIPMENT* ELEKTROGERÄTE

зип Общепит
vsezip.ru
+7(812)987-08-81

	Codice	Denominazione	Denomination	*Denomination*	Bezeichnung	FEC060	FEP050	FEC100	FEP080
1	RTFOC00055	**Manopola comando**	Manette de commande	*Control knob*	Steuerdrehknopf	●	●	●	●
2	RTCU800066	**Regolatore d'energia FCV 240 V.**	Régulateur d'énergie	*Power regulator*	Energiescher Regler	●	●	●	●
3	RTCU900072	**Lampada spia gialla**	Lampe temoin jaune	*Yellow warning lamp*	Gelbe Kontrollenchtenbirne	●	●	●	●
4	RTFOC00031	**Commutatore**	Commutateur du four	*Oven commutator*	Kommutator	●	●	●	●
5	RTFOC00030	**Timer**	Timer	*Timer*	Timer	●	●	●	●
6	RTFOC00029	**Termostato elettronico**	Thermostat électronique	*Electronic thermostat*	Elektra-Thermostat	●	●	●	●
7	RTFOC00033	**Pulsante 2 velocità**	Bouton 2 vitesses	*Two-speed button*	Taste Zwei Geschwindig	●	●	●	●
8	RTFOC00032	**Pulsante luce**	Bouton lumière	*Light button*	Lichttaste	●	●	●	●
9	RTFOC00038	**Termostato Limit**	Thermostat Limit	*Limit thermostat*	Limit Thermostat	●	●	●	●
10	RTFOC00053	**Condensatore**	Condensateur	*Condenser*	Kondensator	●	●	●	●
11	RTFOC00048	**Portafusibile**	Porte-fusible	*Fuse-holder*	Sicherungshalter	●	●	●	●
12	RTFOC00042	**Ciclatore 50Hz**	Cycleur 50 Hz	*Buzzer 50 Hz*	Taktvorrichtung 50 Hz	●	●	●	●
13	RTFOC00039	**Trasformatore 220÷12 V.**	Transformateur el. 220÷12V	*Electric transformer 220÷12 V.*	Transformator 220÷12 V.	●	●	●	●
14	RTFOC00034	**Termocoppia cm. 100**	Thérmocouple cm. 100	*Thermocouple 100 cm.*	Thermoelement 100 cm.	●	●	●	●
15	RTFOC00046	**Ronzatore**	Bourdonneur	*Buzzer*	Summer	●	●	●	●
16	PAFOC00029	**Supporto componenti elettrici**	Support composants électriques	*Electrical components support*	Halterung elektrischen Kompon.	●	●	●	●
17	RTFOC00040	**Relais FCV**	Relais FCV	*Realis FCV*	Relais FCV	●	●	●	●
18	RTFOC00041	**Contatti ausiliari**	Contacts auxiliaires	*Auxiliary contacts*	Nebenkontakte	●	●	●	●
19	RTFOC00044	**Termica 0,8A**	Interrupteur thermique 0,8A	*Overload switch 0,8A*	Thermoschutzschalter 0,8A	●	●		
19	RTFOC00129	**Termica 0,6A**	Interrupteur thermique 0,6A	*Overload switch 0,6A*	Thermoschutzschalter 0,6A			●	●
20	RTFOC00045	**Termica 3 A**	Interrupteur thermique 3 A	*Overload switch 3 A*	Thermoschutzschalter 3 A	●	●		
20	RTFOC00074	**Termica 1,6 A**	Interrupteur thermique 1,6 A	*Overload switch 1,6 A*	Thermoschutzschalter 1,6 A			●	●
21	RTFOC00130	**Sonda al cuore cm. 55**	Sonde thermique cm. 55	*Thermic probe 55 cm*	Wärmefühler 55 cm	●	●		
21	RTFOC00131	**Sonda al cuore cm. 82**	Sonde thermique cm. 82	*Thermic probe 82 cm.*	Wärmefühler 82 cm.			●	●
22	RTBF90045	**Morsettiera 6 poli**	Groupe de conn. des cables	*Terminal bloc 6 poles*	Klemmenbreit 6 polig	●	●	●	●
23	RTFOC00023	**Andisturbo radio**	Antiparasitage radio	*Antijamming*	Funkentstörung	●	●	●	●
24	RTFOC00024	**Fusibile FCV 2,5 A**	Fusibile 2,5 A	*Fuse 2,5 A*	Schmelzsicherung 2,5 A	●	●	●	●
25	RTFOC00047	**Fusibile 0,1 A**	Fusible 0,1 A	*Fuse 0,1 A*	Schmelzsicherung 0,1 A	●	●	●	●

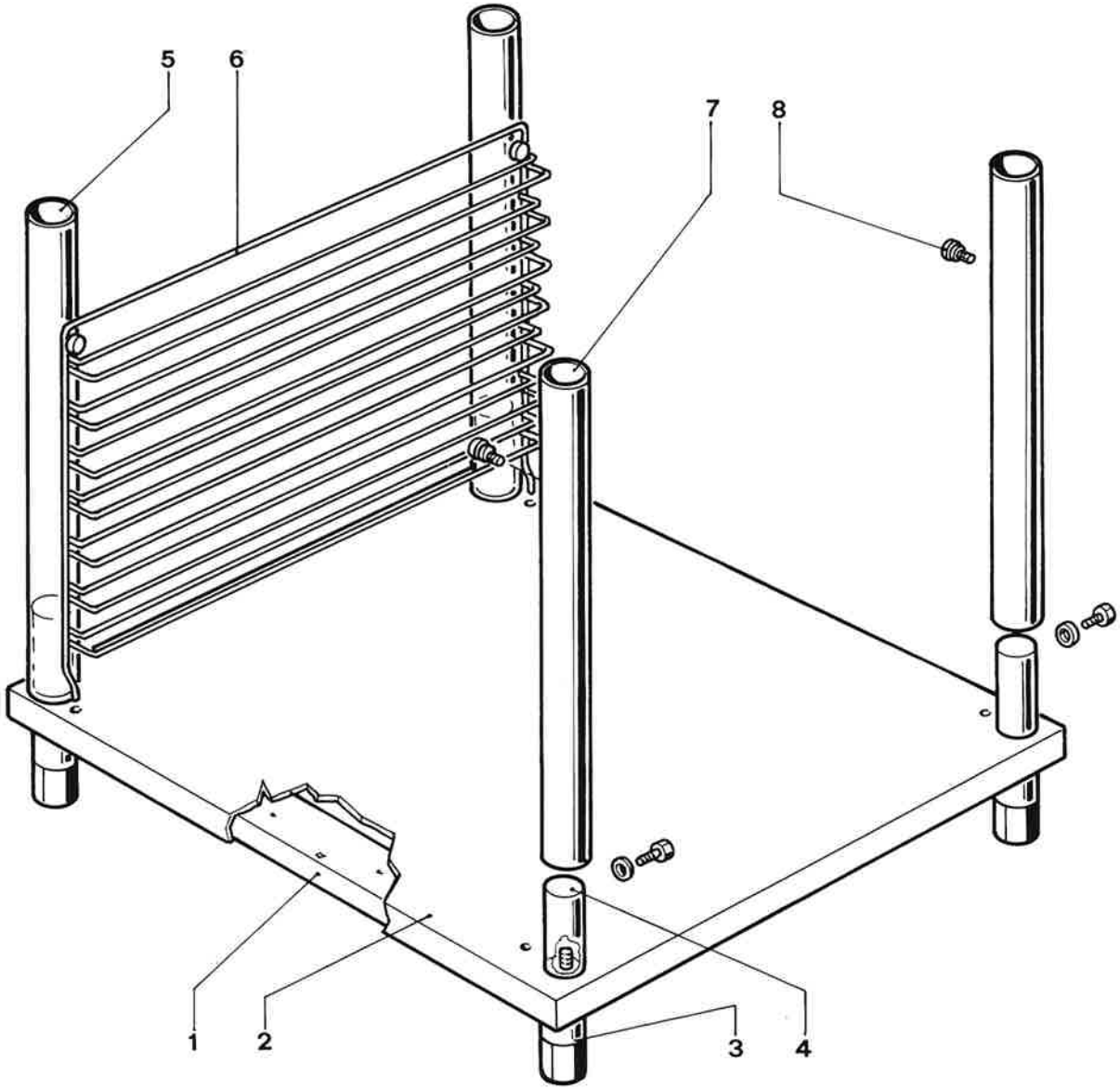

Зип Общепит
vsezip.ru
+7(812)987-08-81

TAV. 204 **SUPPORTO FORNO** SUPPORT DU FOUR *OVEN SUPPORT* OFENHALTERUNG

Зип Общепит
vsezip.ru
+7(812)987-08-81

	Codice	Denominazione	Denomination	*Denomination*	Bezeichnung	
1	GAFOC00077	**Basamento supporto forno**	Soubassement du support	*Oven support base*	Untergestel	●
2	PAFOC00133	**Ripiano supporto forno**	Fonde support du four	*Oven support bottom*	Boden	●
3	RTFOC00119	**Piedino**	Pied	*Foot*	Inox-Fuss	●
4	RTFOC00121	**Rinforzo gamba**	Rentort jambe	*Leg bracing*	Verstärk	●
5	PAFOC00134	**Gamba sinistra**	Jambe gauche	*Left leg*	Linke Fuss	●
6	RTFOC00122	**Griglia laterale**	Grille latérale	*Lateral grate*	Seitenrost	●
7	PAFOC00135	**Gamba destra**	Jambe droite	*Right leg*	Rechte Fuss	●
8	RTBF700043	**Attacco griglia**	Attaque grille	*Grate connection*	Seitenanschluss	●