eloma

Ersatzteilliste

Backmaster EB EBC

Зип Общепит
vsezip.ru
+7(812)987-08-81

Зип Общепит
vsezip.ru
+7(812)987-08-81

Pos. 35 EB40 ab Geräte Nr. 540
Part No. 35 EB40 from unit No. 540
Pièce No. 35 EB40 a partir de e'appareil No. 540

Pos. 35 EB60 ab Geräte Nr. 690
Part No. 35 EB60 from unit No. 690
Pièce No. 35 EB60 a partir de e'appareil No. 690

Pos. 35 EB100 ab Geräte Nr. 443
Part No. 35 EB100 from unit No. 443
Pièce No. 35 EB100 a partir de e'appareil No. 443

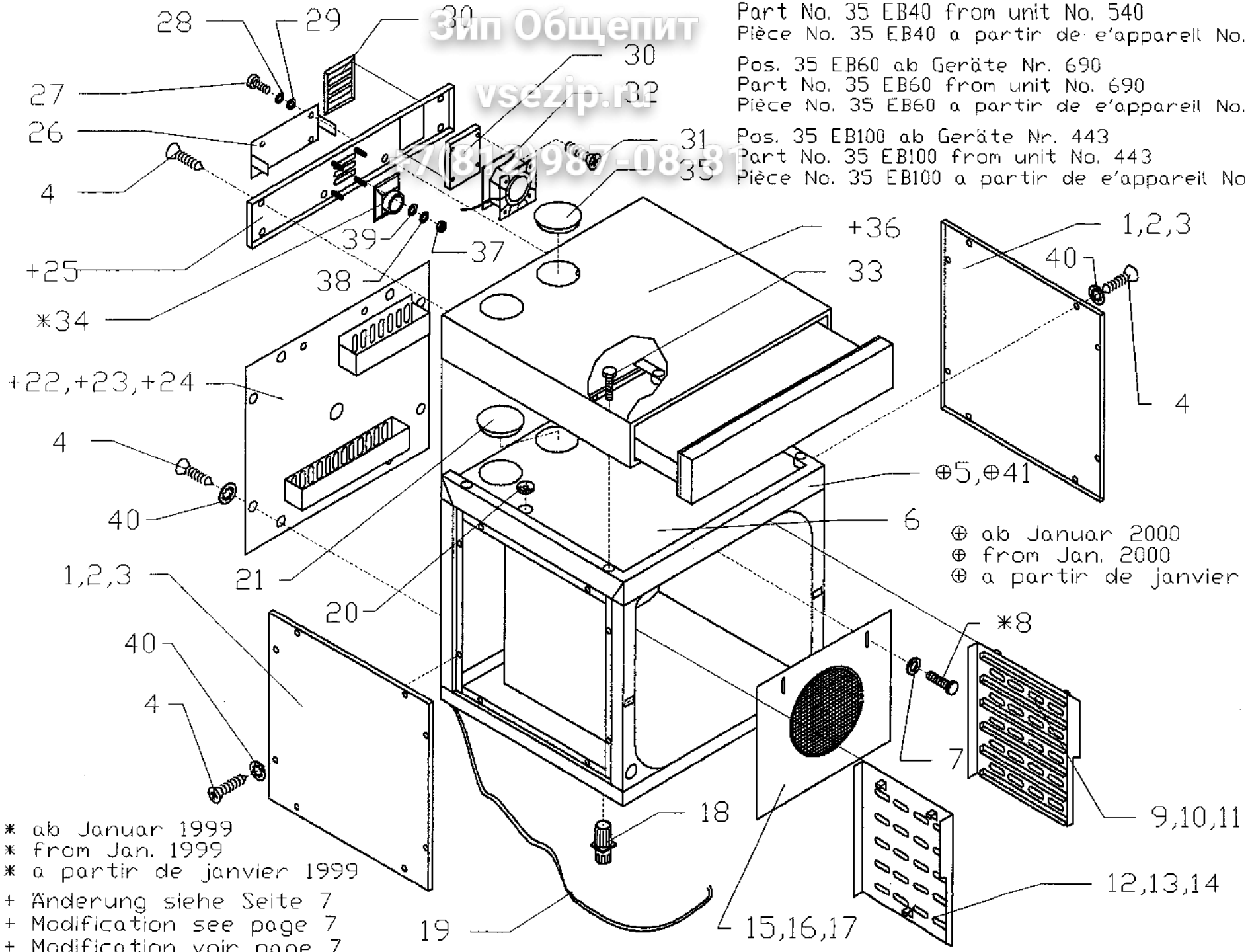

⊕ ab Januar 2000
⊕ from Jan. 2000
⊕ a partir de janvier 2000

* ab Januar 1999
* from Jan. 1999
* a partir de janvier 1999

+ Änderung siehe Seite 7
+ Modification see page 7
+ Modification voir page 7

Backmaster EB EBC

Зип Общепит
vse2.ru
+7(812)987-08-81

Pos.	Artikel Nr.	Teile/Benennung		EB 40	EB 60	EB 100	EBC 80	EBC 100	EBC 120	electron	digital
1	477106	Seitendeckel EB 40		●			●	●		●	●
2	477108	Seitendeckel EB 60			●			●	●	●	●
3	477110	Seitendeckel EB 100				●				●	●
4	503051	Linsensenkbl. DIN 7983 C	3,9x13 V2A	●	●	●	●	●	●	●	●
5	473105	Rahmen kpl. EB		●	●	●	●	●	●	●	●
6	475113	Gehäusedeckel EB		●	●	●	●	●	●	●	●
7	508013	Scheibe DIN 125 A 6,4	V2A	●	●	●	●	●	●	●	●
8	500026	6kt-Schraube ISO 4017	M6x16 V2A	●	●	●	●	●	●	●	●
9	470097	Einhängegestell rechts	EB 40	●			●	●		●	●
10	470099	Einhängegestell rechts	EB 60		●			●	●	●	●
11	470101	Einhängegestell rechts	EB 100			●				●	●
12	470098	Einhängegestell links	EB 40	●			●	●		●	●
13	470100	Einhängegestell links	EB 60		●			●	●	●	●
14	470102	Einhängegestell links	EB 100			●				●	●
15	471065	Luftleitblech EB 40		●			●	●		●	●
16	471064	Luftleitblech EB 60			●			●	●	●	●
17	471063	Luftleitblech EB 100				●				●	●
18	407015	Einschlagstellfuß best.:	Gewindegl	●	●	●	●	●	●	●	●
19	302004	Anschlusskabel 5 x 2,5	konfektionl	●	●	●	●	●	●	●	●
20	306015	Gummitülle DG 9 Welch-PVC		●	●	●	●	●	●	●	●
21	407058	Abdeckung EB		●	●	●				●	●
22	477112	Rückwand EB 40		●			●	●		●	●
23	477113	Rückwand EB 60			●			●	●	●	●
24	477114	Rückwand EB 100				●				●	●
25	477115	Rückwand Elektrogehäuse	EB	●	●	●	●	●	●	●	●
26	483149	Verbindungsblech EB		●	●	●	●	●	●	●	●
27	500091	Linsenschraube DIN 7985	M4x8 V2A	●	●	●	●	●	●	●	●
28	510013	Zahnscheibe DIN 6797 J4,3	V2A	●	●	●	●	●	●	●	●
29	508012	Scheibe DIN 125 A 4,3	V2A	●	●	●	●	●	●	●	●
30	418043	Austrittsfiltergehäuse f.	Axiallüfter	●	●	●	●	●	●	●	●
31	503016	Linsenblechs. DIN 7981 C	3,9x9,5 V2	●	●	●	●	●	●	●	●
32	392016	Axiallüfter 10 W	Pabst 80x8	●	●	●	●	●	●	●	●
33	500038	6kt-Schraube ISO 4017	M8x45 V2A	●	●	●	●	●	●	●	●
34	348016	Lautsprecher EB 40/60/100		●	●	●	●	●	●	●	●
35	407085	Blindstopfen Abluft	EB 30 XL	●	●	●	●	●	●	●	●
36	475109	Elektrogehäuse EB		●	●	●				●	●
37	505030	6kt-Mutter ISO 4032	M3 V4A D	●	●	●	●	●	●	●	●
38	510020	Zahnscheibe DIN 6797 J3,2	V2A	●	●	●	●	●	●	●	●

Pos.	Artikel Nr.	Teile/Benennung		EB 40	EB 60	EB 100	EBC 80	EBC 100	EBC 120	electron	digital
39	508005	Scheibe DIN 125 A 3,2	V2A	●	●	●	●	●	●	●	●
40	510012	Fächerscheibe DIN 6798	V4,3 V2A	●	●	●	●	●	●	●	●
41	473106	Rahmen kpl. EB	Linksausfül	●	●	●	●	●	●	●	●

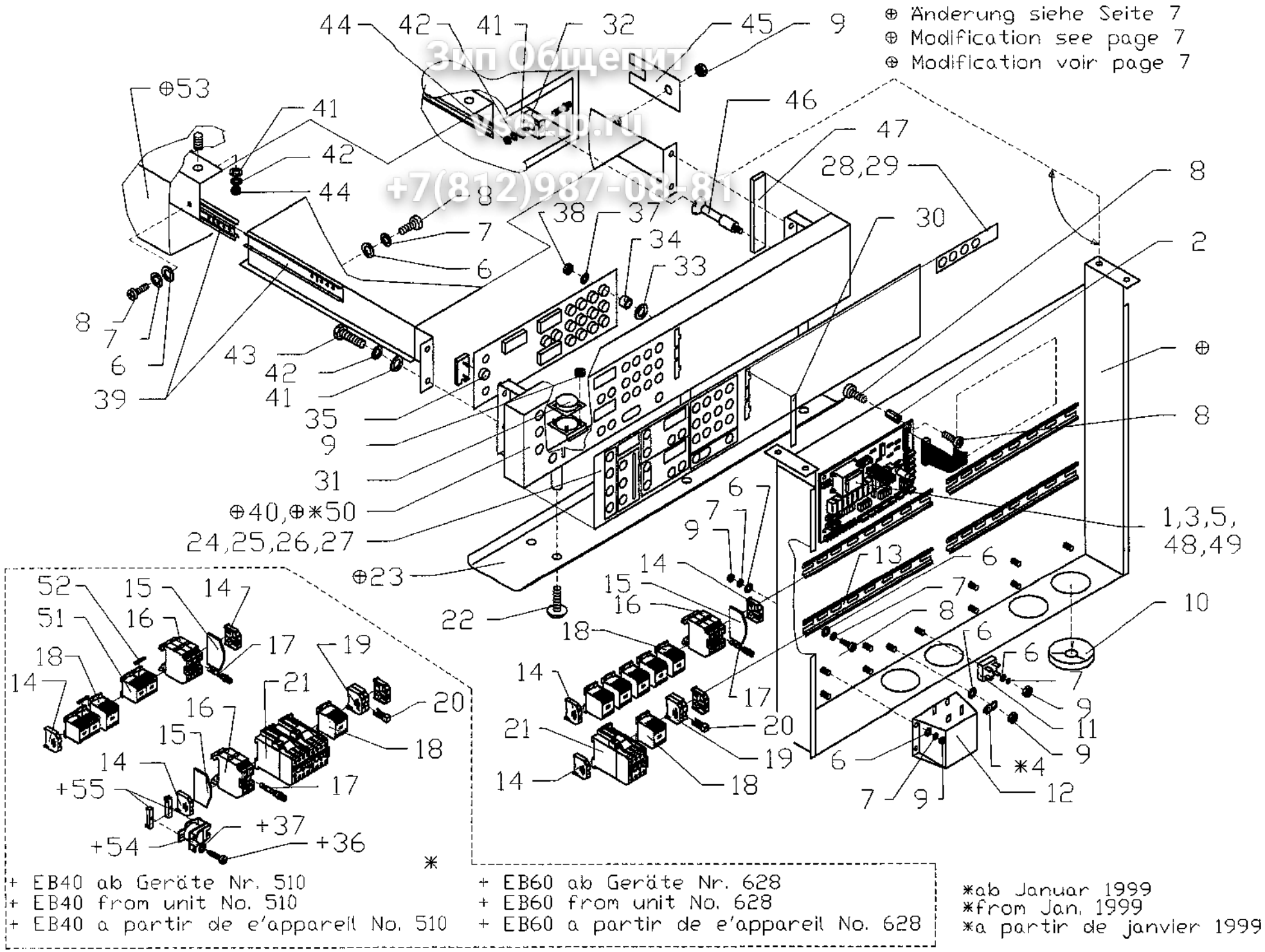

Зип Общепит
vsezip.ru
+7(812)987-08-81

Backmaster EB EBC

Зип Общепит
www.zip-sb.ru
+7(812)987-08-81

Pos.	Artikel Nr.	Teile/Benennung		EB 40	EB 60	EB 100	EBC 80	EBC 100	EBC 120	electron	digital
1	375006	Feinsicherung 1 A träge	5 x 20 mm	●	●	●	●	●	●	●	●
2	414049	Sechskantabstandsbolzen	M4 I-I, L-12	●	●	●	●	●	●	●	●
3	375007	Feinsicherung 2 A	träge 5 x 2	●	●	●	●	●	●	●	●
4	362136	MS-Erdungszeichen		●	●	●	●	●	●	●	●
5	344025	Netzplatine EB 40/60/100		●	●	●	●	●	●	●	●
6	508012	Scheibe DIN 125 A 4,3	V2A	●	●	●	●	●	●	●	●
7	510013	Zahnscheibe DIN 6797 J4,3	V2A	●	●	●	●	●	●	●	●
8	500091	Linsenschraube DIN 7985	M4x8 V2A	●	●	●	●	●	●	●	●
9	505031	6kt-Mutter ISO 4032	M4 V4A D	●	●	●	●	●	●	●	●
10	306025	Durchführungstülle PG 36		●	●	●				●	●
11	308056	Brückengleichrichter	Silizium m	●	●	●	●	●	●	●	●
12	310024	Transformator	EB / ED 20	●	●	●	●	●	●	●	●
13	373002	Klemmschiene Meterware	35 DIN	●	●	●	●	●	●	●	●
14	371010	Endklammer für Schiene	35 DIN	●	●	●	●	●	●	●	●
15	371009	Abschlußplatte für	Sicherungs	●	●	●	●	●	●	●	●
16	373009	Sicherungsklemme 35 DIN		●	●	●	●	●	●	●	●
17	375002	Feinsicherung 10 A	träge 5 x 2	●	●	●	●	●	●	●	●
18	324001	Schütz A9/30-10	230 V 50-6	●	●	●	●	●	●	●	●
19	371021	Universalklemme blau 4qmm		●	●	●	●	●	●	●	●
20	371014	Querbrücker 4qmm (281)		●	●	●	●	●	●	●	●
21	324002	Schütz	230 V 50 H	●	●	●	●	●	●	●	●
22	500124	Becherschraube M4x8 V2A	mit Innens	●	●	●	●	●	●	●	●
23	479052	Wärmestrahlblech EB	nicht mehr	●	●	●	●	●	●	●	●
24	350126	Klebeblende EB 40/60/100	Backmaste	●	●	●				●	
25	350142	Klebeblende EB 40/60/100	Backmaste	●	●	●					●
26	350125	Klebeblende Doppelstation	EBC elect				●	●	●	●	
27	350143	Klebeblende Doppelstation	EBC Digita				●	●	●		●
28	360024	Bogen Backsymbole	selbstklebe	●	●	●	●	●	●	●	
29	360027	Symbolleiste Backsymbole	EB Ersatz	●	●	●	●	●	●	●	
30	382015	Einschubabdeckung EB	Pantone 21	●	●	●	●	●	●	●	●
31	348016	Lautsprecher EB 40/60/100		●	●	●	●	●	●	●	●
32	382014	Verbinderaufnahme		●	●	●	●	●	●	●	●
33	508019	Unterlegscheibe Nylon	D7 d3 h0,5	●	●	●	●	●	●	●	●
34	412081	Distanzhülse Kunststoff	D-6,5; d-3,	●	●	●	●	●	●	●	●
35	340027	Steuerungstastatur	EB 40/60/1	●	●	●	●	●	●	●	
36	503010	Linsenblechs. DIN 7981 C	2,9x9,5 V2	●	●	●	●	●	●	●	●
37	510020	Zahnscheibe DIN 6797 J3,2	V2A	●	●	●	●	●	●	●	●
38	505030	6kt-Mutter ISO 4032	M3 V4A D	●	●	●	●	●	●	●	●

Pos.	Artikel Nr.	Teile/Benennung		EB 40	EB 60	EB 100	EBC 80	EBC 100	EBC 120	electron	digital
39	399067	Soft-Roller EB		●	●	●	●	●	●	●	●
40	476077	Bedienblende EB		●	●	●				●	●
41	508013	Scheibe DIN 125 A 6,4	V2A	●	●	●	●	●	●	●	●
42	510015	Zahnscheibe DIN 6797 J6,4	V2A	●	●	●	●	●	●	●	●
43	500043	6kt-Schraube ISO 4017	M6x10 V2A	●	●	●	●	●	●	●	●
44	505032	6kt-Mutter ISO 4032	M6 V4A D	●	●	●	●	●	●	●	●
45	483130	Spezialwerkzeug EB		●	●	●	●	●	●	●	●
46	382013	Zapfen Verschluß	Bedienblen	●	●	●	●	●	●	●	●
47	425129	Dichtung Bedienelement EB	pro Gerät =	●	●	●	●	●	●	●	●
48	375005	Feinsicherung 6,3 A	5 x 20 mm	●	●	●	●	●	●	●	●
50	476076	Frontblende Doppelstation	EBC				●	●	●	●	●
51	324023	Kompakt-Wendeschütz	230 V 50/6	●	●	●	●	●	●	●	●
52	324024	Wendeverbinder		●	●	●	●	●	●	●	●
53	475109	Elektrogehäuse EB		●	●	●	●	●	●	●	●
54	348002	Summer		●	●	●	●	●	●	●	●
55	373017	Haltebock isoliert	für Tragesc	●	●	●	●	●	●	●	●
####	304188	Kabelbaum Steuerung EB	230 V	●	●	●				●	●
####	304196	Kabelbaum Steuerung EB	12 V	●	●	●				●	●
####	304190	Kabelbaum Heizung EB 40		●						●	●
####	304191	Kabelbaum Heizung EB 60	EB 100		●	●				●	●
####	304204	Kabelbaum Steuerung 230 V	Backstatior				●	●	●	●	●
####	304205	Kabelbaum Steuerung 12 V	Backstatior				●	●	●	●	●
####	304202	Kabelbaum Heizung EB 40	Backstatior				●			●	●
####	304210	Kabelbaum Heizung EBC	Backstatior					●	●	●	●
####	304193	Kabelbaum Beleuchtung	Türverschl	●	●	●	●	●	●	●	●
####	304300	KB Türtaster EB		●	●	●	●	●	●	●	●
####	304112	Kabelbaum Entstörfilter		●	●	●	●	●	●	●	●
####	302059	Verbindungskabel konfekt.	MMD/MMC	●	●	●				●	●
####	304304	Kabelbaum Wassermangel	EB 40/60/1	●	●	●	●	●	●	●	●

Зип Общепит
vsezip.ru
+7(812)987-08-81

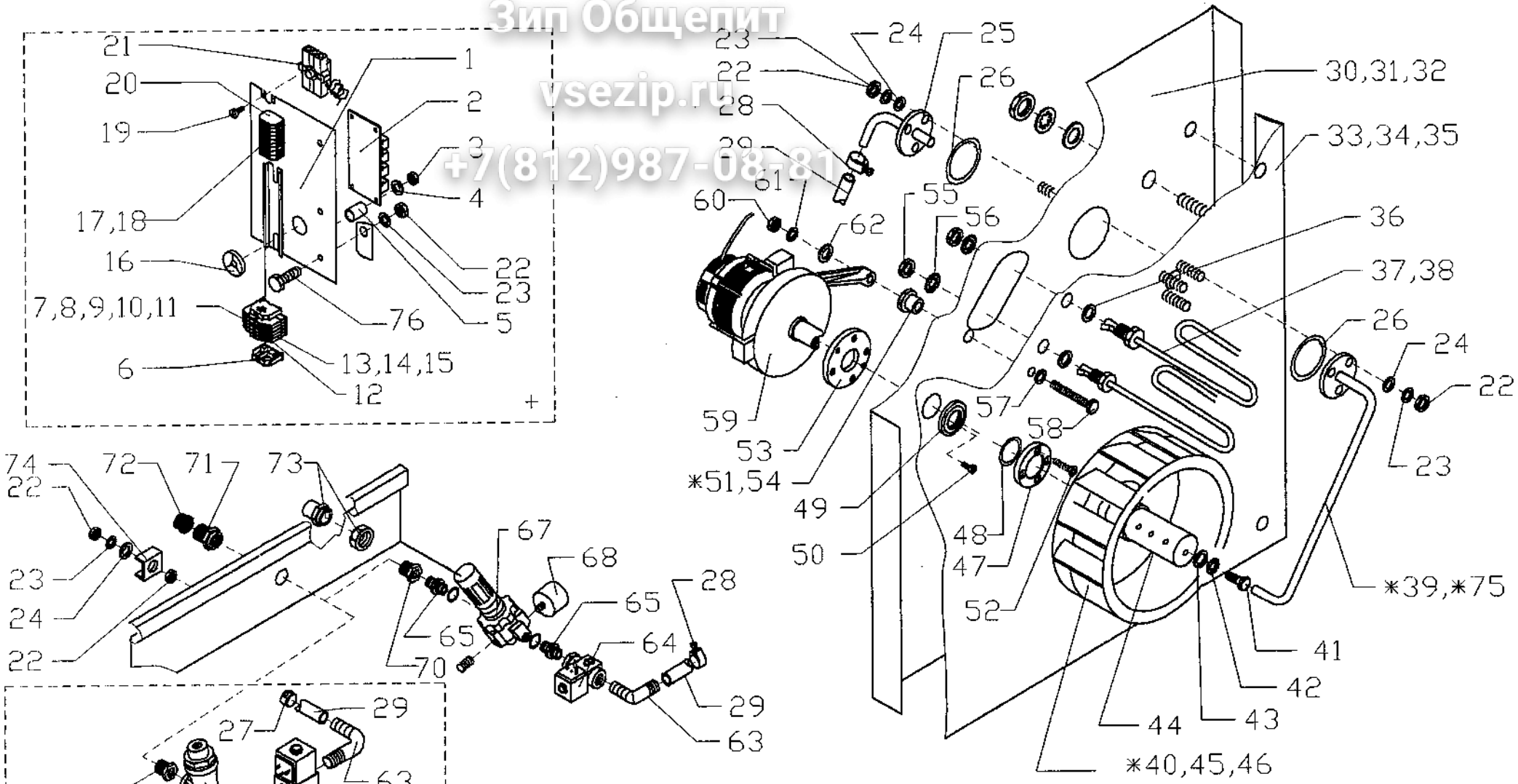

+ Änderung siehe Seite 8
+ Modificaton see page 8
+ Modification voir page 8

* EB40 ab Geräte Nr. 502
* EB40 from unit No. 502
* EB40 a partir de e'appareil No. 502
* EB60 ab Geräte Nr. 757
* EB60 from unit No. 757
* EB60 a partir de e'appareil No. 757
* EB100 ab Geräte Nr. 479
* EB100 from unit No. 479
* EB100 a partir de e'appareil No. 479

* EBC80 ab Geräte Nr. 401
* EBC80 from unit No. 401
* EBC80 a partir de e'appareil No. 401
* EBC100 ab Geräte Nr. 407
* EBC100 from unit No. 407
* EBC100 a partir de e'appareil No. 407
* EBC120 ab Geräte Nr. 419
* EBC120 from unit No. 419
* EBC120 a partir de e'appareil No. 419

Backmaster EB EBC

Зип Общепит
Всероссия
+7(812)987-908-87

Pos.	Artikel Nr.	Teile/Benennung		EB 40	EB 60	EB 100	EBC 80	EBC 100	EBC 120	electron	digital
1	482036	Elektromontageblech EB		●	●	●	●	●	●	●	●
2	308018	Entstörplatine	5-3 bis 20-1	●	●	●	●	●	●	●	●
3	505030	6kt-Mutter ISO 4032	M3 V4A D	●	●	●	●	●	●	●	●
4	508005	Scheibe DIN 125 A 3,2	V2A	●	●	●	●	●	●	●	●
5	412081	Distanzhülse Kunststoff	D-6,5; d-3,5	●	●	●	●	●	●	●	●
6	371010	Endklammer für Schiene	35 DIN	●	●	●	●	●	●	●	●
7	362004	Bezeichnungsstreifen	"Erdung"	●	●	●	●	●	●	●	●
8	362005	Bezeichnungsstreifen "N"		●	●	●	●	●	●	●	●
9	362006	Bezeichnungsstreifen "L1"		●	●	●	●	●	●	●	●
10	362007	Bezeichnungsstreifen "L2"		●	●	●	●	●	●	●	●
11	362008	Bezeichnungsstreifen "L3"		●	●	●	●	●	●	●	●
12	371057	Abschlußplatte für 4qmm	3-Leiterkle	●	●	●	●	●	●	●	●
13	371055	Durchgangsklemme 3-Leiter	blau	●	●	●	●	●	●	●	●
14	371054	Durchgangsklemme 3-Leiter	grau	●	●	●	●	●	●	●	●
15	371056	Schutzleiterklemme	3-Leiter	●	●	●	●	●	●	●	●
16	306019	Durchführungstülle PG 16		●	●	●	●	●	●	●	●
17	371041	Klemme 2-Leiter grau	mit Flansch	●	●	●	●	●	●	●	●
18	371040	Klemme 2-Leiter grau	mit Rastfuß	●	●	●	●	●	●	●	●
19	500091	Linsenschraube DIN 7985	M4x8 V2A	●	●	●	●	●	●	●	●
20	371039	Abschlußplatte m. Rastfuß		●	●	●	●	●	●	●	●
21	336017	Sicherheitstemp. Begrenz.	305 C - 20	●	●	●	●	●	●	●	●
22	505032	6kt-Mutter ISO 4032	M6 V4A D	●	●	●	●	●	●	●	●
23	510015	Zahnscheibe DIN 6797 J6,4	V2A	●	●	●	●	●	●	●	●
24	508013	Scheibe DIN 125 A 6,4	V2A	●	●	●	●	●	●	●	●
25	442165	Wasserzulaufrohr EB	Elektroraum	●	●	●	●	●	●	●	●
26	425126	O-Ring 21,8x3,53 Viton		●	●	●	●	●	●	●	●
27	422065	Spannschelle Edelstahl	wiederverw	●	●	●	●	●	●	●	●
28	422017	Schlauchschelle D 14		●	●	●	●	●	●	●	●
29	444055	Silikonschlauch 6x3	transparent	●	●	●	●	●	●	●	●
30	478068	Motorisolationsblech	EB 40	●			●	●		●	●
31	478067	Motorisolationsblech	EB 60		●			●	●	●	●
32	478066	Motorisolationsblech	EB 100			●				●	●
33	478075	Motorversteifungsblech	EB 40	●			●	●		●	●
34	478076	Motorversteifungsblech	EB 60		●			●	●	●	●
35	478077	Motorversteifungsblech	EB 100			●				●	●
36	427021	Dichtung Cu Heizkörper		●	●	●	●	●	●	●	●
37	318082	Heizkörper 2.30 KW 230 V	Tropendich	●	●	●	●	●	●	●	●
38	318045	Heizkörper 1,45 KW 230 V	f. ELH u. M		●	●		●	●	●	●

Pos.	Artikel Nr.	Teile/Benennung		EB 40	EB 60	EB 100	EBC 80	EBC 100	EBC 120	electron	digital
39	442164	Wasserzulaufrohr Garraum	EB 60		●	●		●	●	●	●
40	392028	Lüfterrad EB	verstärkte A		●	●		●	●	●	●
41	500048	6kt-Schraube ISO 4017	M10x16 V2	●	●	●	●	●	●	●	●
42	510017	Zahnscheibe DIN 6797	J 10,5 V2A	●	●	●	●	●	●	●	●
43	508014	Scheibe DIN 125 A 10,5	V2A	●	●	●	●	●	●	●	●
44	412075	Verteilerhülse	Dampferze	●	●	●	●	●	●	●	●
45	392022	Gebläserad EB 40	280 x 80	●			●	●		●	●
46	392021	Gebläserad EB 60/100	350 x 80		●	●		●	●	●	●
47	412089	Wellendichtflansch E	MD/MMD/E	●	●	●	●	●	●	●	●
48	425066	O-Ring 34,59x2,62 Viton		●	●	●	●	●	●	●	●
49	425063	Wellendichtring	16x41x3	●	●	●	●	●	●	●	●
50	500095	Linsenschraube DIN 7985	M3x10 V2A	●	●	●	●	●	●	●	●
51	412153	Motorabstandsbuchse für	Lüfterrad E		●	●		●	●	●	●
52	500147	Senkschraube DIN 963	M4x16 V2A	●	●	●	●	●	●	●	●
53	412037	Wellendichtflansch A	MD/MMD/E	●	●	●	●	●	●	●	●
54	412139	Motorabstandsbuchse EB		●	●	●	●	●	●	●	●
55	505079	Mutter Heizkörper	M 14 x 1,5	●	●	●	●	●	●	●	●
56	510019	Zahnscheibe DIN 6797	J 14,5 V2A	●	●	●	●	●	●	●	●
57	427038	Kupferdichtung		●	●	●	●	●	●	●	●
58	500009	6kt-Schraube ISO 4014	M8x50 V2A	●	●	●	●	●	●	●	●
59	390044	Motor EB 40-60-100	Drehstrom	●	●	●	●	●	●	●	●
60	505033	6kt-Mutter ISO 4032	M8 V4A D	●	●	●	●	●	●	●	●
61	510016	Zahnscheibe DIN 6797 J8,4	V2A	●	●	●	●	●	●	●	●
62	508017	Scheibe DIN 125 A 8,4	V2A	●	●	●	●	●	●	●	●
63	440007	Winkeleinschraubtülle		●	●	●	●	●	●	●	●
64	436040	Magnetventil/Modell 2000	2/2 Wege-	●	●	●	●	●	●	●	●
65	440092	Doppelnippel G 1/8		●	●	●	●	●	●	●	●
66	440083	Winkel-Einschraubstutzen		●	●	●	●	●	●	●	●
67	436009	Druckminderer 1/8		●	●	●	●	●	●	●	●
68	348009	Manometer 0-4,0 bar		●	●	●	●	●	●	●	●
70	440046	Reduziernippel	G 3/8 - G 1	●	●	●	●	●	●	●	●
71	440039	Reduzierstück	A 3/4" I 3/8	●	●	●	●	●	●	●	●
72	418017	Schmutzsieb		●	●	●	●	●	●	●	●
73	306030	Verschraubung PG 21 mit	Zugentlast	●	●	●	●	●	●	●	●
74	483035	Potentialausgleichsklemme		●	●	●	●	●	●	●	●
75	442169	Wasserzulaufrohr Garraum	EB 40	●			●	●	●	●	●
76	500043	6kt-Schraube ISO 4017	M6x10 V2A	●	●	●	●	●	●	●	●

Зип Общепит
vsezip.ru
+7(812)987-08-81

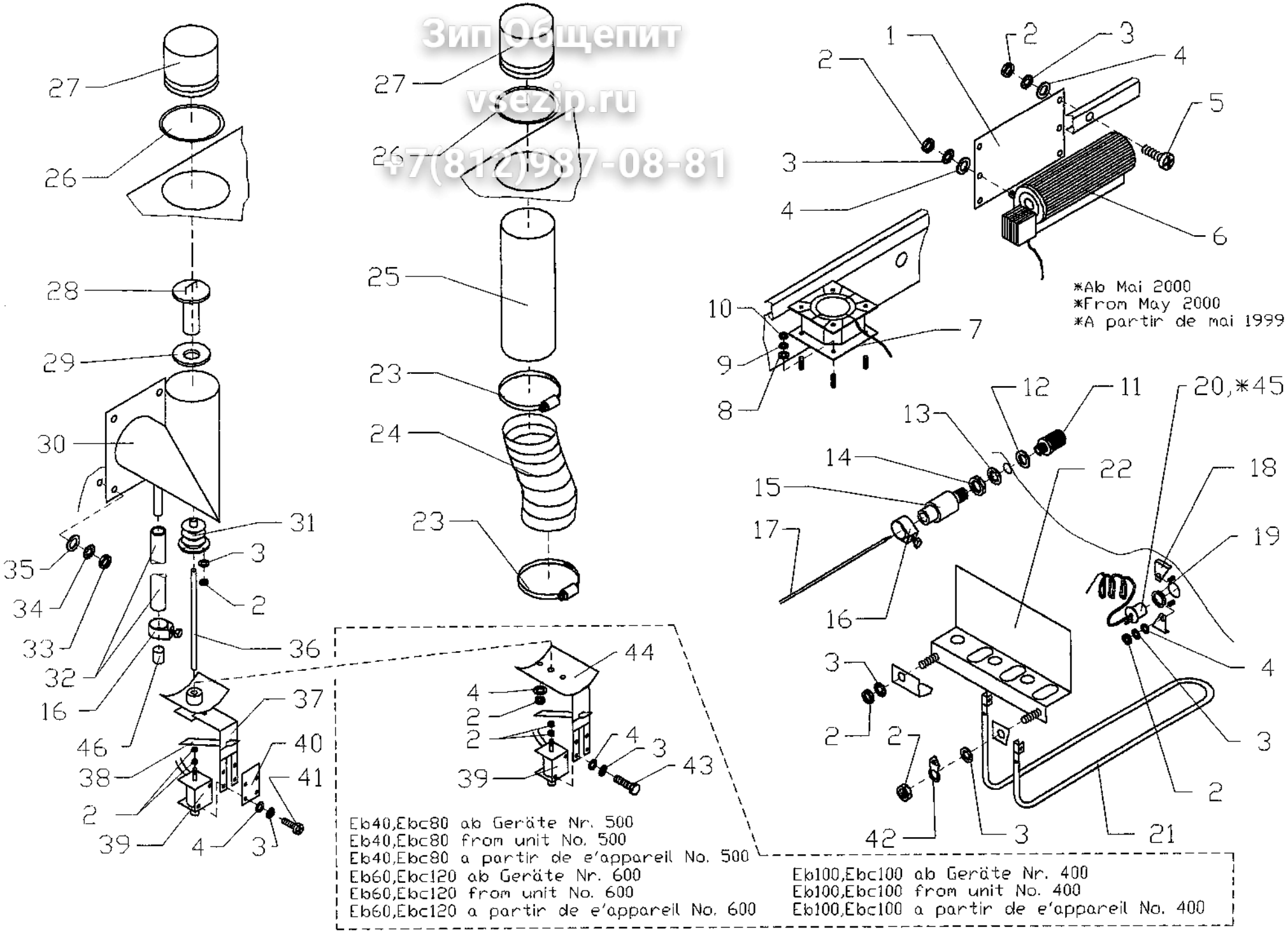

Backmaster EB EBC

Зип Общепит
Ростов-на-Дону
+7(8 12)98 7 408-83

Pos.	Artikel Nr.	Teile/Benennung		EB 40	EB 60	EB 100	EBC 80	EBC 100	EBC 120	electron	digital
1	483148	Halterung	Querstrom	●	●	●	●	●	●	●	●
2	505031	6kt-Mutter ISO 4032	M4 V4A D	●	●	●	●	●	●	●	●
3	510013	Zahnscheibe DIN 6797 J4,3	V2A	●	●	●	●	●	●	●	●
4	508012	Scheibe DIN 125 A 4,3	V2A	●	●	●	●	●	●	●	●
5	500098	Linsenschraube DIN 7985	M4x10 V2A	●	●	●	●	●	●	●	●
6	390023	Querstromgebläse 180mm		●	●	●	●	●	●	●	●
7	392016	Axiallüfter 10 W	Pabst 80x8				●	●	●	●	●
8	508002	Scheibe DIN 125 A 5,3	V2A				●	●	●	●	●
9	510014	Zahnscheibe DIN 6797 J5,3	V2A				●	●	●	●	●
10	505024	6kt-Mutter ISO 4032	M5 V4A D				●	●	●	●	●
11	418001	Schutzsieb	für Thermo	●	●	●	●	●	●	●	●
12	427059	Dichtring CU vernickelt	13 x 19 x 1	●	●	●	●	●	●	●	●
13	510018	Zahnscheibe DIN 6797	J 12,5 V2A	●	●	●	●	●	●	●	●
14	505045	Mutter 1/4"		●	●	●	●	●	●	●	●
15	410013	Tefloneinsatz	für NiCrNi	●	●	●	●	●	●	●	●
16	422017	Schlauchschelle D 14		●	●	●	●	●	●	●	●
17	316004	Thermoelement-Fühler	Ni-Cr-Ni M	●	●	●	●	●	●	●	●
18	485032	Halter, STB-Fühler29x25x2	MMD 10-1	●	●	●	●	●	●	●	●
19	412073	Zentrierbuchse D21x15x3,5	MMD 10-1	●	●	●	●	●	●	●	●
20	336017	Sicherheitstemp. Begrenz.	305 C - 20	●	●	●	●	●	●	●	●
21	318094	Heizkörper 230 V - 600 W	Tropendich	●	●	●	●	●	●	●	●
22	483129	Fangblech für	Bodenheizl	●	●	●	●	●	●	●	●
23	422055	Schlauchschelle EB	Flexschlau				●	●	●	●	●
24	444038	Flexschlauch EBC					●	●	●	●	●
25	442171	Verlängerungsrohr EBC					●	●	●	●	●
26	425140	O-Ring EB	Verlängeru	●	●	●	●	●	●	●	●
27	442162	Verlängerungsrohr Abluft	EB	●	●	●	●	●	●	●	●
28	483127	Deckel Abluft EB		●	●	●	●	●	●	●	●
29	425134	Silikonscheibe Abluft EB		●	●	●	●	●	●	●	●
30	442163	Abluftrohr EB		●	●	●	●	●	●	●	●
31	427060	Faltenbalg Werkstoff:	Silikon fett	●	●	●	●	●	●	●	●
32	444013	Siliconschlauch 9,5x2,5mm	beschichtet	●	●	●	●	●	●	●	●
33	505032	6kt-Mutter ISO 4032	M6 V4A D	●	●	●	●	●	●	●	●
34	510015	Zahnscheibe DIN 6797 J6,4	V2A	●	●	●	●	●	●	●	●
35	508013	Scheibe DIN 125 A 6,4	V2A	●	●	●	●	●	●	●	●
36	403045	Hubstange Abluft EB		●	●	●	●	●	●	●	●
37	483126	Trägerblech Abluft EB	KD-Ersatz=	●	●	●	●	●	●	●	●
38	483141	Uebersetzungshebel Abluft	EB 40/60/1	●	●	●	●	●	●	●	●

Pos.	Artikel Nr.	Teile/Benennung		EB 40	EB 60	EB 100	EBC 80	EBC 100	EBC 120	electron	digital
39	322024	Hubmagnet Abluftklappe	EB 30 / ED	●	●	●	●	●	●	●	●
40	483142	Gegenplatte Abluft EB	KD-Ersatz=	●	●	●	●	●	●	●	●
41	500091	Linsenschraube DIN 7985	M4x8 V2A	●	●	●	●	●	●	●	●
42	362136	MS-Erdungszeichen		●	●	●	●	●	●	●	●
43	500264	6kt-Schraube ISO 4017	M4x6 V2A	●	●	●	●	●	●	●	●
44	483164	Halteblech kpl.	Zuluftrohr	●	●	●	●	●	●	●	●
45	336030	Sicherheitstemp. Begrenz.	1-polig 305	●	●	●	●	●	●	●	●
46	407085	Blindstopfen Abluft	EB 30 XL	●	●	●	●	●	●	●	●

Зип Общепит
vsezip.ru
+7(812)987-08-81

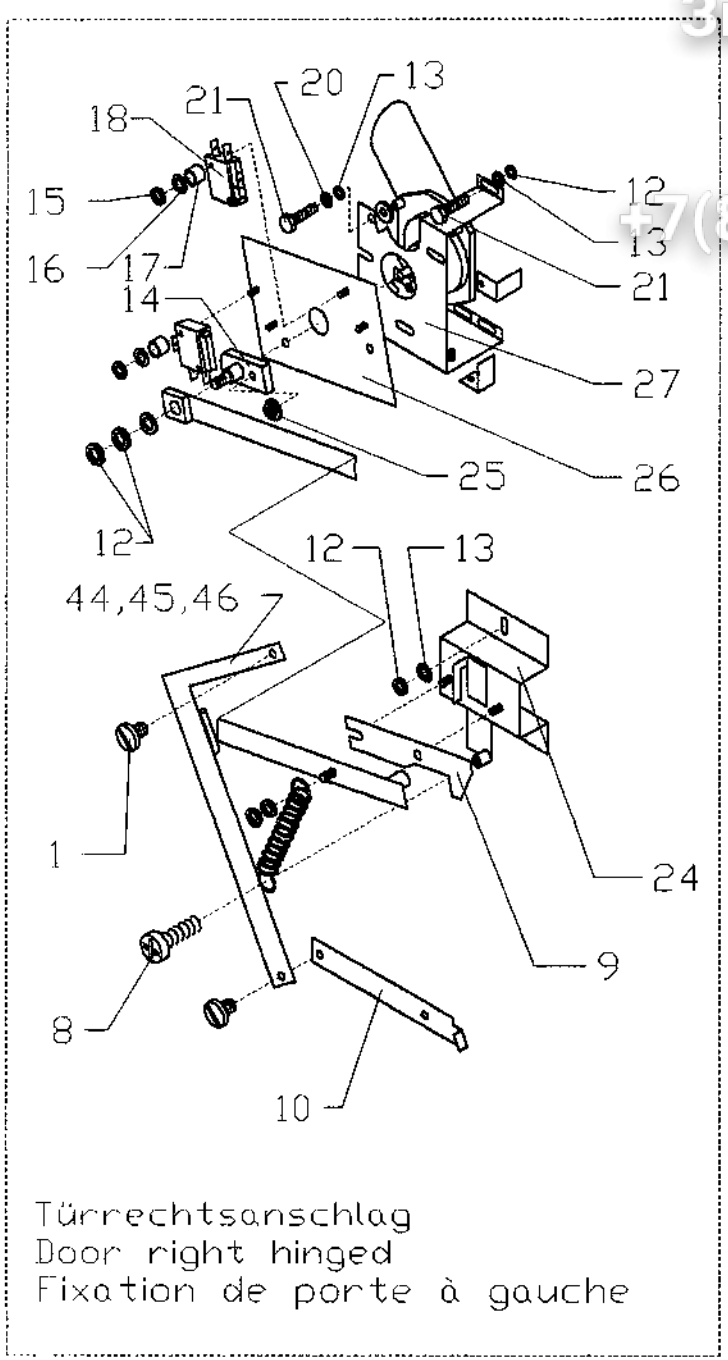

Türrechtsanschlag
Door right hinged
Fixation de porte à gauche

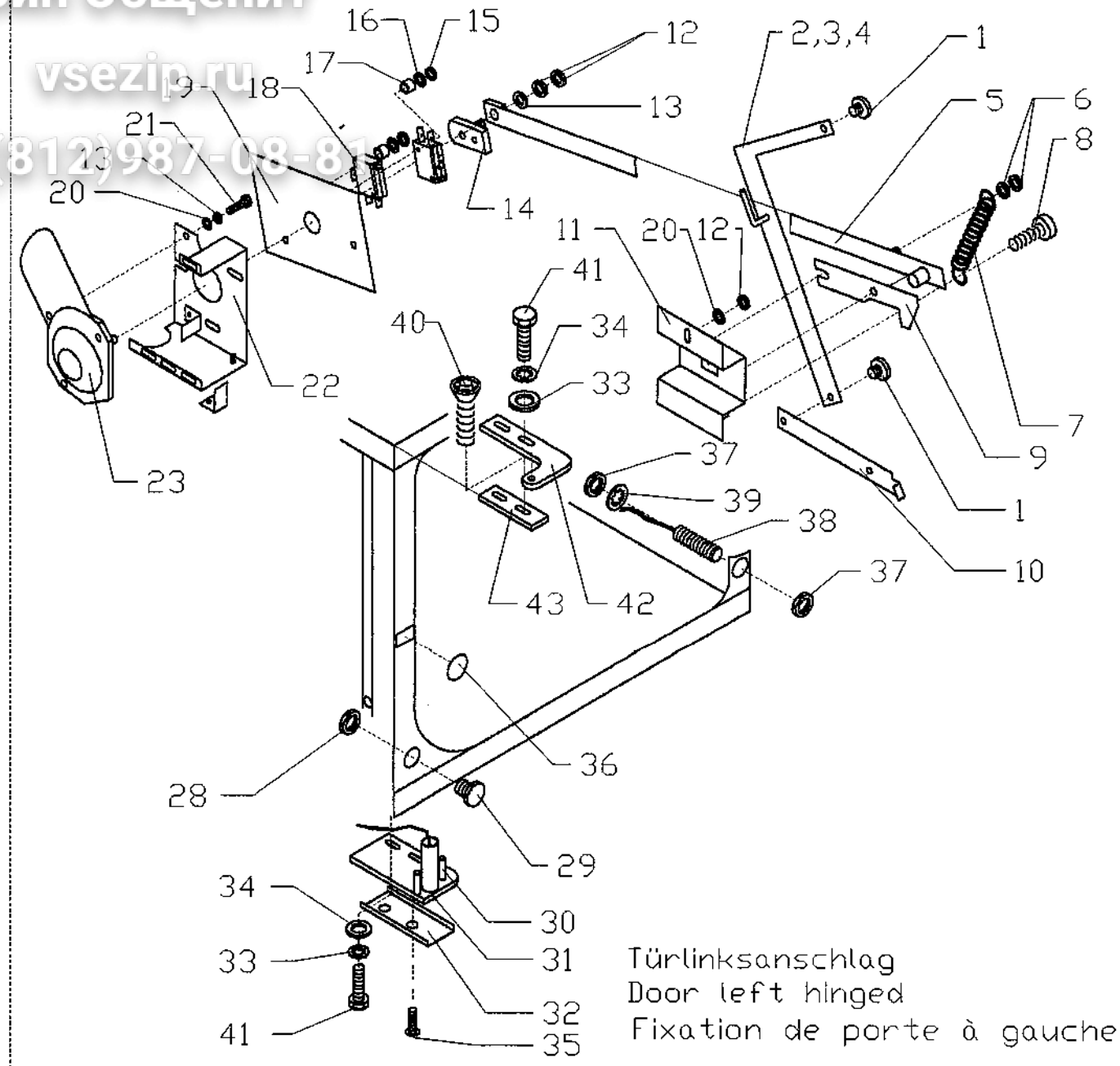

Türlinksanschlag
Door left hinged
Fixation de porte à gauche

Backmaster EB EBC

Зип Общепит
www.zip-
+7(831) 2987-118-8

Pos.	Artikel Nr.	Teile/Benennung		EB 40	EB 60	EB 100	EBC 80	EBC 100	EBC 120	electron	digital
1	500223	Fensterschraube ELG 3	5, 8	●	●	●	●	●	●	●	●
2	385100	Winkelhebel EB 40	Linksausfü	●			●	●		●	●
3	385101	Winkelhebel EB 60	Linksausfü		●			●	●	●	●
4	385107	Winkelhebel EB 100	Linksausfü			●				●	●
5	385096	Zugstange EB		●	●	●	●	●	●	●	●
6	505031	6kt-Mutter ISO 4032	M4 V4A D	●	●	●	●	●	●	●	●
7	416051	Zugfeder Winkelhebel EB		●	●	●	●	●	●	●	●
8	500119	Linsenschraube DIN 7985	M4x20 V2A	●	●	●	●	●	●	●	●
9	380064	Schließhaken Türverschluß	EB	●	●	●	●	●	●	●	●
10	483140	Druckstange EB		●	●	●	●	●	●	●	●
11	483139	Schloßkasten EB		●	●	●	●	●	●	●	●
12	505032	6kt-Mutter ISO 4032	M6 V4A D	●	●	●	●	●	●	●	●
13	510015	Zahnscheibe DIN 6797 J6,4	V2A	●	●	●	●	●	●	●	●
14	410030	Kurbel Türverschluß EB		●	●	●	●	●	●	●	●
15	505030	6kt-Mutter ISO 4032	M3 V4A D	●	●	●	●	●	●	●	●
16	510020	Zahnscheibe DIN 6797 J3,2	V2A	●	●	●	●	●	●	●	●
17	320057	Rolle für Microschalter		●	●	●	●	●	●	●	●
18	320055	Microschalter		●	●	●	●	●	●	●	●
19	483147	Schaltblech EB	Linksausfü	●	●	●	●	●	●	●	●
20	508013	Scheibe DIN 125 A 6,4	V2A	●	●	●	●	●	●	●	●
21	500043	6kt-Schraube ISO 4017	M6x10 V2A	●	●	●	●	●	●	●	●
22	390049	Motorhalterung EB	Linksausfü	●	●	●	●	●	●	●	●
23	390032	Getriebemotor 24 V DC		●	●	●	●	●	●	●	●
24	483137	Schloßkasten EB	Linksausfü	●	●	●	●	●	●	●	●
25	505108	Scheibenmutter M6	A 2	●	●	●	●	●	●	●	●
26	483138	Schaltblech EB		●	●	●	●	●	●	●	●
27	390045	Motorhalterung EB		●	●	●	●	●	●	●	●
28	505027	6kt-Mutter ISO 4032	M12 V4A	●	●	●	●	●	●	●	●
29	500069	Blindschraube M12x20	V2A	●	●	●	●	●	●	●	●
30	401041	Türlager unten EB	Linksausfü	●	●	●	●	●	●	●	●
31	401047	Distanzplatte Türlager EB		●	●	●	●	●	●	●	●
32	407058	Abdeckung EB		●	●	●	●	●	●	●	●
33	510016	Zahnscheibe DIN 6797 J8,4	V2A	●	●	●	●	●	●	●	●
34	508017	Scheibe DIN 125 A 8,4	V2A	●	●	●	●	●	●	●	●
35	500067	Becherschraube M4x12	V2A	●	●	●	●	●	●	●	●
36	483150	Blinddeckel EB		●	●	●	●	●	●	●	●
37	505100	Sechskantmutter M10x1	flache Form	●	●	●	●	●	●	●	●
38	320048	Magnetschalter aus Ms.	Kabel 1,5 r	●	●	●	●	●	●	●	●

Pos.	Artikel Nr.	Teile/Benennung		EB 40	EB 60	EB 100	EBC 80	EBC 100	EBC 120	electron	digital
39	510017	Zahnscheibe DIN 6797	J 10,5 V2A	●	●	●	●	●	●	●	●
40	500243	Senkschraube Türscharnier	EB	●	●	●	●	●	●	●	●
41	500047	6kt-Schraube ISO 4017	M8x30 V2A	●	●	●	●	●	●	●	●
42	401043	Türlager oben EB	Linksausfü	●	●	●	●	●	●	●	●
43	401047	Distanzplatte Türlager EB		●	●	●	●	●	●	●	●
44	385103	Winkelhebel EB 40		●			●	●		●	●
45	385095	Winkelhebel EB 60	Türverschl		●			●	●	●	●
46	385106	Winkelhebel EB 100				●				●	●
####	304193	Kabelbaum Beleuchtung	Türverschl	●	●		●	●	●	●	●

Зип Общепит
vsezip.ru
+7(812)987-08-81

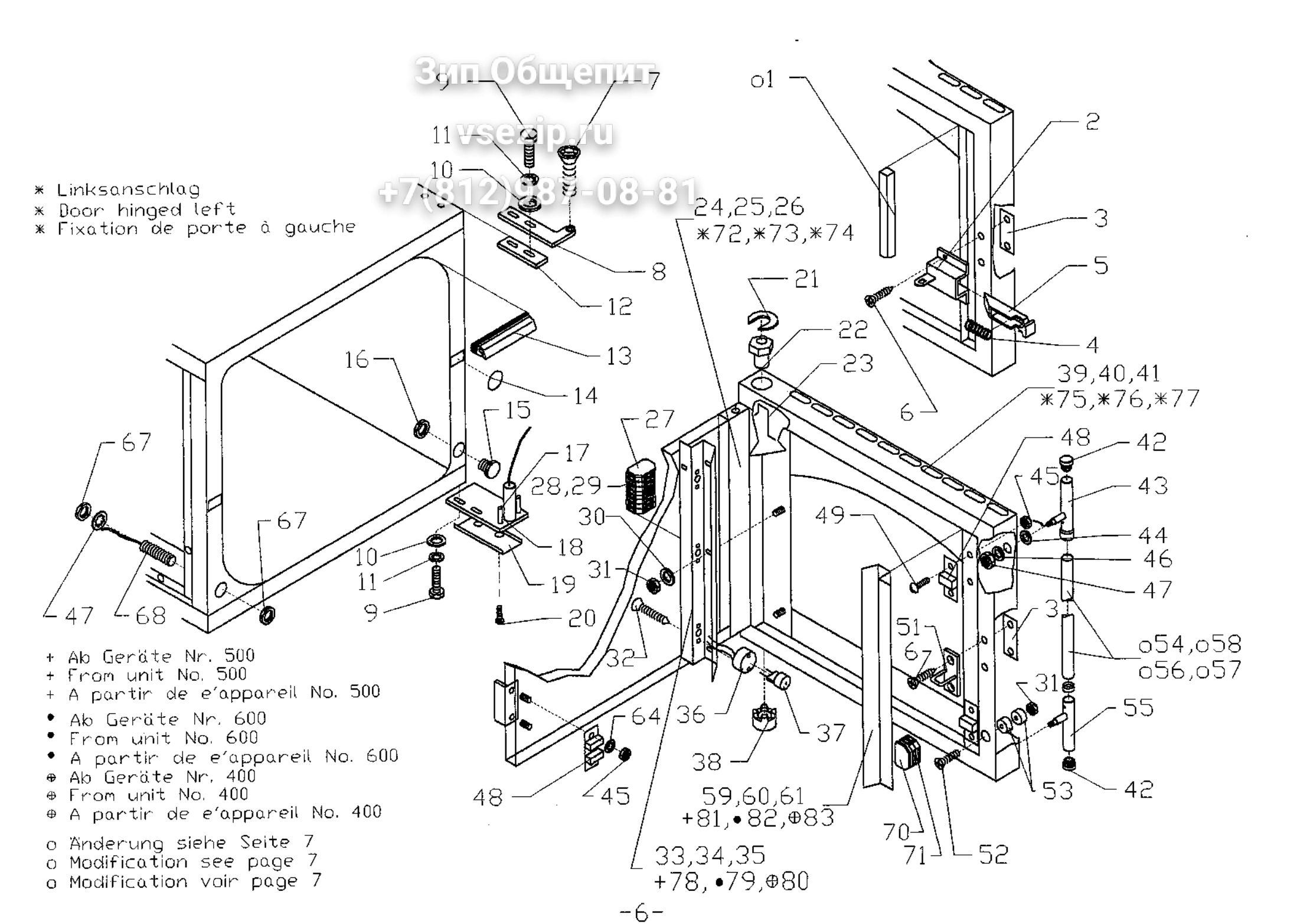

Backmaster EB EBC

Зип Общепит
Vestel.ru
+7(812)987-08-81

Pos.	Artikel Nr.	Teile/Benennung		EB 40	EB 60	EB 100	EBC 80	EBC 100	EBC 120	electron	digital
1	425139	Türanschlag Innenscheibe	EB Ersatz=	●	●	●	●	●	●	●	●
2	380062	Verschluß EB		●	●	●	●	●	●	●	●
3	380063	Gegenplatte Verschluß EB		●	●	●	●	●	●	●	●
4	416050	Feder f. Verschluß EB		●	●	●	●	●	●	●	●
5	380067	Schieber EB		●	●	●	●	●	●	●	●
6	500133	Senkschraube DIN 965	M5x16 V2A	●	●	●	●	●	●	●	●
7	500243	Senkschraube Türschamier	EB	●	●	●	●	●	●	●	●
8	401044	Türlager oben EB		●	●	●	●	●	●	●	●
9	500047	6kt-Schraube ISO 4017	M8x30 V2A	●	●	●	●	●	●	●	●
10	508017	Scheibe DIN 125 A 8,4	V2A	●	●	●	●	●	●	●	●
11	510016	Zahnscheibe DIN 6797 J8,4	V2A	●	●	●	●	●	●	●	●
12	401047	Distanzplatte Türlager EB		●	●	●	●	●	●	●	●
13	425127	Türdichtung EB	Endlosdich	●	●	●	●	●	●	●	●
14	483150	Blinddeckel EB		●	●	●	●	●	●	●	●
15	500069	Blindschraube M12x20	V2A	●	●	●	●	●	●	●	●
16	505027	6kt-Mutter ISO 4032	M12 V4A	●	●	●	●	●	●	●	●
17	401042	Türlager unten EB		●	●	●	●	●	●	●	●
19	407058	Abdeckung EB		●	●	●	●	●	●	●	●
20	500067	Becherschraube M4x12	V2A	●	●	●	●	●	●	●	●
21	508047	Sicherungsblech	EB Türlage	●	●	●	●	●	●	●	●
22	412131	Exzenterlager EB		●	●	●	●	●	●	●	●
23	420029	Scharnierhaken EB		●	●	●	●	●	●	●	●
24	472072	Innentür kpl. EB 40		●			●	●		●	●
25	472061	Innentür kpl. EB 60			●			●	●	●	●
26	472066	Innentür kpl. EB 100				●				●	●
27	371039	Abschlußplatte m. Rastfuß		●	●	●	●	●	●	●	●
28	371037	Klemme 4-Leiter grau mit	Rastfuß	●	●	●	●	●	●	●	●
29	371038	Klemme 2-Leiter blau mit	Rastfuß	●	●	●	●	●	●	●	●
30	508012	Scheibe DIN 125 A 4,3	V2A	●	●	●	●	●	●	●	●
31	505031	6kt-Mutter ISO 4032	M4 V4A D	●	●	●	●	●	●	●	●
32	500095	Linsenschraube DIN 7985	M3x10 V2A	●	●	●	●	●	●	●	●
33	472046	Reflektor links EB 40		●			●	●		●	●
34	472044	Reflektor links EB 60			●			●	●	●	●
35	472042	Reflektor links EB 100				●				●	●
36	314029	Halogen Lampenfassung	mit Sockel	●	●	●	●	●	●	●	●
37	312021	Halogenlampe 12 V 20 W	für Sockel	●	●	●	●	●	●	●	●
38	401038	Bundbuchse d=6, D=8		●	●	●	●	●	●	●	●
39	472055	Tür außen kpl. EB 40		●			●	●		●	●

Pos.	Artikel Nr.	Teile/Benennung		EB 40	EB 60	EB 100	EBC 80	EBC 100	EBC 120	electron	digital
40	472056	Tür außen kpl. EB 60			●			●	●	●	●
41	472057	Tür außen kpl. EB 100				●				●	●
42	407062	Lamellenstopfen D=28	schwarz	●	●	●	●	●	●	●	●
43	380059	Endstück oben Türgriff	EB	●	●	●	●	●	●	●	●
44	412134	Griffscheibe EB		●	●	●	●	●	●	●	●
45	505030	6kt-Mutter ISO 4032	M3 V4A D	●	●	●	●	●	●	●	●
46	510017	Zahnscheibe DIN 6797	J 10,5 V2A	●	●	●	●	●	●	●	●
47	505034	6kt-Mutter ISO 4032	M10 V2A	●	●	●	●	●	●	●	●
48	380061	Schnappverschluß für	Innenschei	●	●	●	●	●	●	●	●
49	500191	Linsenschraube DIN 7985	M3x5 V2A	●	●	●	●	●	●	●	●
51	380062	Verschluß EB		●	●	●	●	●	●	●	●
52	500132	Senkschraube DIN 965	M4x25 V2A	●	●	●	●	●	●	●	●
53	322010	Magnet 20x10 mit roter	Kappe	●	●	●	●	●	●	●	●
54	630035	BG Türgriff EB 40		●			●			●	●
55	380056	Endstück unten Türgriff	EB	●	●	●	●	●	●	●	●
56	403052	Schieberohr EB 40		●			●	●		●	●
57	403046	Schieberohr EB 60			●	●		●	●	●	●
58	630034	BG Türgriff EB 60			●	●		●	●	●	●
59	472045	Reflektor rechts EB 40		●			●	●		●	●
60	472043	Reflektor rechts EB 60			●			●	●	●	●
61	472041	Reflektor rechts EB 100				●				●	●
64	510020	Zahnscheibe DIN 6797 J3,2	V2A	●	●	●	●	●	●	●	●
67	505100	Sechskantmutter M10x1	flache Form	●	●	●	●	●	●	●	●
68	320061	Magnetschalter 2,5m	D=8x60	●	●	●	●	●	●	●	●
72	472060	Innentür kpl. EB 40	Linksansch	●			●	●		●	●
73	472062	Innentür kpl. EB 60	Linksansch		●			●	●	●	●
74	472063	Innentür kpl. EB 100	Linksansch			●				●	●
75	472070	Tür außen kpl. EB 40	Linksausfül	●			●	●		●	●
76	472071	Tür außen kpl. EB 60	Linksausfül		●			●	●	●	●
77	472065	Tür außen kpl. EB 100	Linksausfül			●				●	●
78	472118	Reflektor links EB 40/00		●			●	●		●	●
79	472120	Reflektor links EB 60/00			●				●	●	●
80	472122	Reflektor links	EB 100/00			●				●	●
81	472117	Reflektor rechts EB 40/00		●			●	●		●	●
82	472119	Reflektor rechts EB 60/00			●				●	●	●
83	472121	Reflektor rechts	EB 100/00			●				●	●

Зип Общепит
vsezip.ru
+7(812)987-08-81

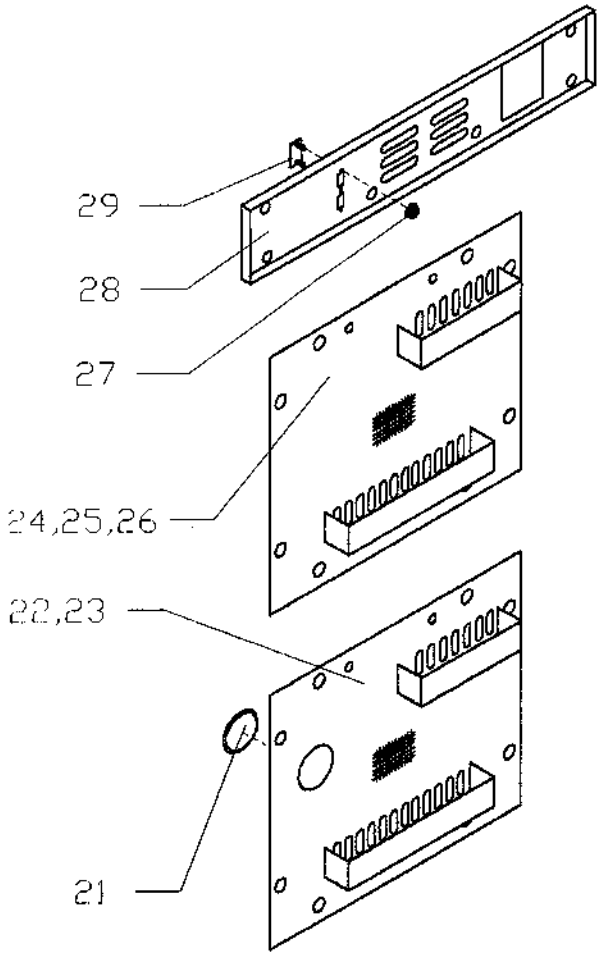

+4,+5 incl. Position 1,2,3,6,7,8,9
+4,+5 including parts No. 1,2,3,6,7,8,9
+4,+5 complet avec pièces No. 1,2,3,6,7,8,9

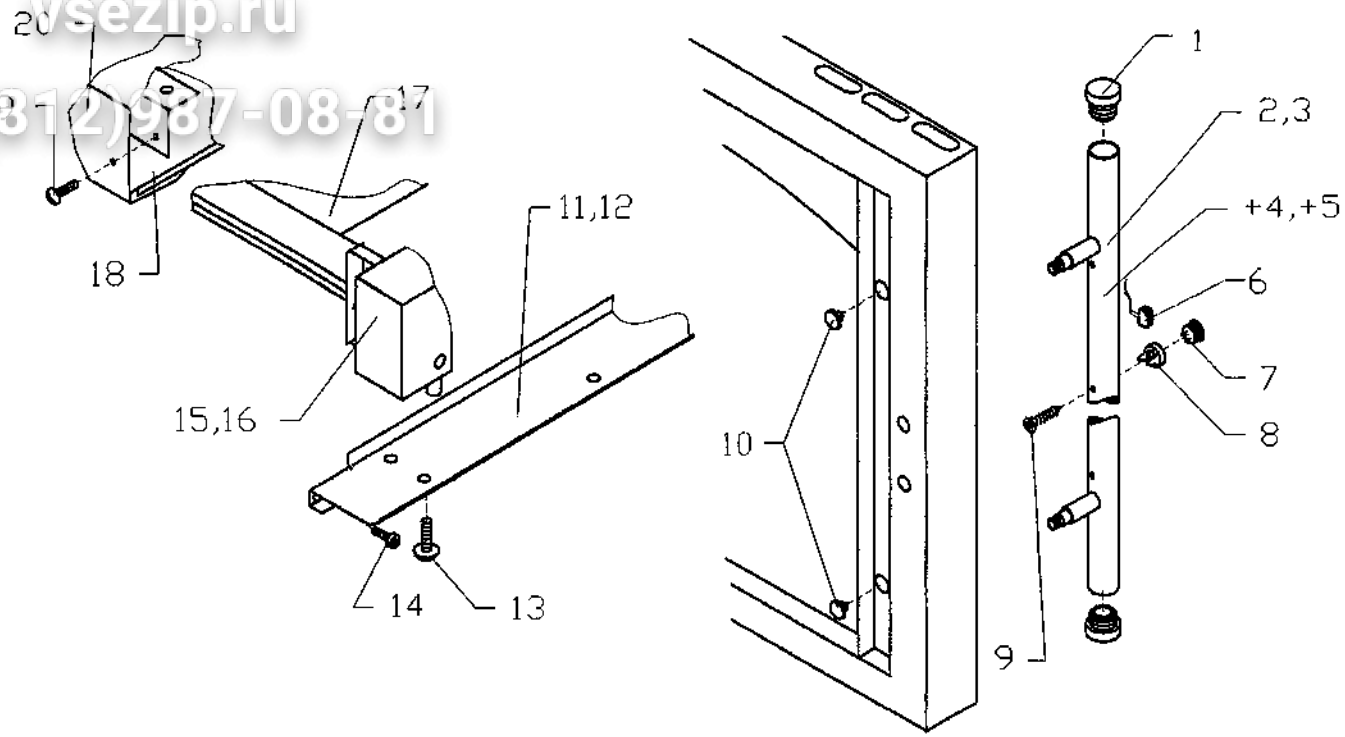

EB40 ab Geräte Nr. 500
EB40 from unit No. 500
EB40 a partir de e'appareil No. 500

EB60 ab Geräte Nr. 600
EB60 from unit No. 600
EB60 a partir de e'appareil No. 600

EB100 ab Geräte Nr. 400
EB100 from unit No. 400
EB100 a partir de e'appareil No. 400

EBC80 ab Geräte Nr. 400
EBC80 from unit No. 400
EBC80 a partir de e'appareil No. 400

EBC100 ab Geräte Nr. 400
EBC100 from unit No. 400
EBC100 a partir de e'appareil No. 400

EBC120 ab Geräte Nr. 400
EBC120 from unit No. 400
EBC120 a partir de e'appareil No. 400

EB40 ab Geräte Nr. 502
EB40 from unit No. 502
EB40 a partir de e'appareil No. 502

EB60 ab Geräte Nr. 757
EB60 from unit No. 757
EB60 a partir de e'appareil No. 757

EB100 ab Geräte Nr. 479
EB100 from unit No. 479
EB100 a partir de e'appareil No. 4

EBC80 ab Geräte Nr. 401
EBC80 from unit No. 401
EBC80 a partir de e'appareil No. 401

EBC100 ab Geräte Nr. 407
EBC100 from unit No. 407
EBC100 a partir de e'appareil No. 407

EBC120 ab Geräte Nr. 419
EBC120 from unit No. 419
EBC120 a partir de e'appareil No. 419

Backmaster EB EBC

Зип Общепит
vse-zip.ru
+7(812)987-08-81

Pos.	Artikel Nr.	Teile/Benennung		EB 40	EB 60	EB 100	EBC 80	EBC 100	EBC 120	electron	digital
1	407062	Lamellenstopfen D=28	schwarz	●	●	●	●	●	●	●	●
2	380106	Türgriff EB 40/00		●			●			●	●
3	380107	Türgriff EB 60/100/00			●	●		●	●	●	●
4	380109	Türgriff EB 40/00	montiert	●			●			●	●
5	380110	Türgriff EB 60/100/00	montiert		●	●		●	●	●	●
6	371079	Anschlußklemme		●	●	●	●	●	●	●	●
7	322031	Piezo Taster	EB 40/60/1	●	●	●	●	●	●	●	●
8	407076	Formteil für Taster EB/00		●	●	●	●	●	●	●	●
9	500267	Holzsenkschraube	DIN 92 3x3	●	●	●	●	●	●	●	●
10	407079	Zargenpuffer 50 Shore	Silikon rot	●	●	●	●	●	●	●	●
11	478099	Wärmestrahlblech LA	EB 40/60/1	●	●	●	●	●	●	●	●
12	478098	Wärmestrahlblech RA	EB 40/60/1	●	●	●	●	●	●	●	●
13	500124	Becherschraube M4x8 V2A	mit Innense	●	●	●	●	●	●	●	●
14	500093	Linsenschraube DIN 7985	M4x12 V2A	●	●	●	●	●	●	●	●
15	479072	Bedienblende EB/99		●	●	●				●	●
16	479071	Bedienblende kpl EBC/99					●	●	●	●	●
17	474082	Installationswanne EB/99		●	●	●	●	●	●	●	●
18	473112	Gehäuseboden kpl EB/99	für Elektrok	●	●	●	●	●	●	●	●
19	500066	Becherschraube M4x8	V2A	●	●	●	●	●	●	●	●
20	475152	Gehäusehaube kpl. EB/99		●	●	●	●	●	●	●	●
21	306019	Durchführungstülle PG 16					●		●	●	●
22	477112	Rückwand EB 40		●			●			●	●
23	477113	Rückwand EB 60			●			●	●	●	●
24	477114	Rückwand EB 100				●				●	●
25	477144	Rückwand EB 60 gebohrt						●	●	●	●
26	477145	Rückwand EB 40 gebohrt					●	●		●	●
27	505115	Scheibenmutter M3 V2A		●	●	●	●	●	●	●	●
28	477143	Rückwand Elektrokasten	EB 40/60/1	●	●	●	●	●	●	●	●
29	483224	Blinddeckel Schnittstelle	RS 223	●	●	●	●	●	●	●	●
####	304300	KB Türtaster EB		●	●	●	●	●	●	●	●

Pos.	Artikel Nr.	Teile/Benennung	EB 40	EB 60	EB 100	EBC 80	EBC 100	EBC 120	electron	digital

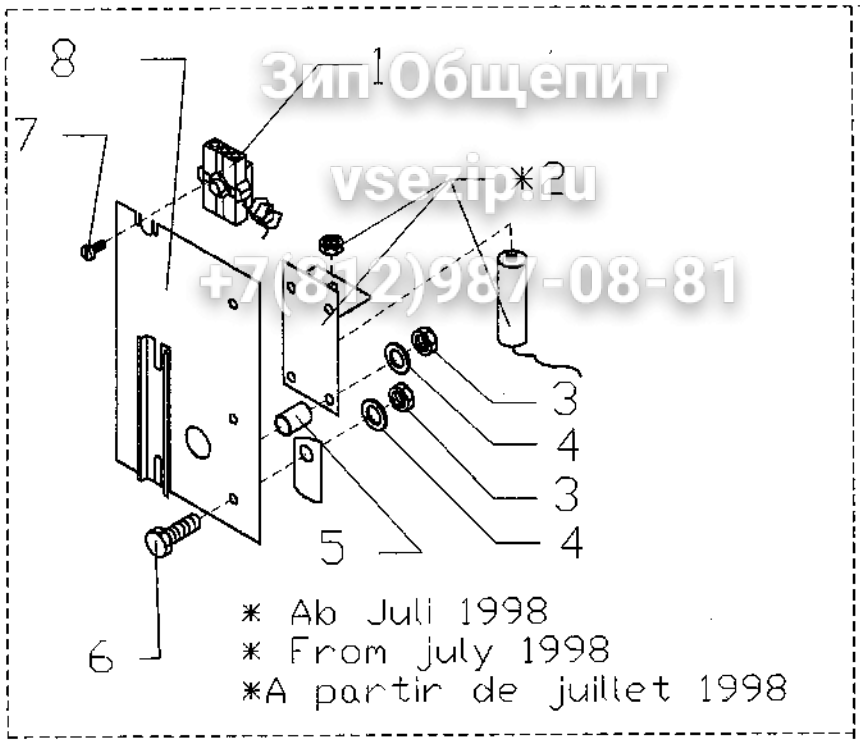

ЗипОбщепит
vsezip.ru
+7(812)987-08-81

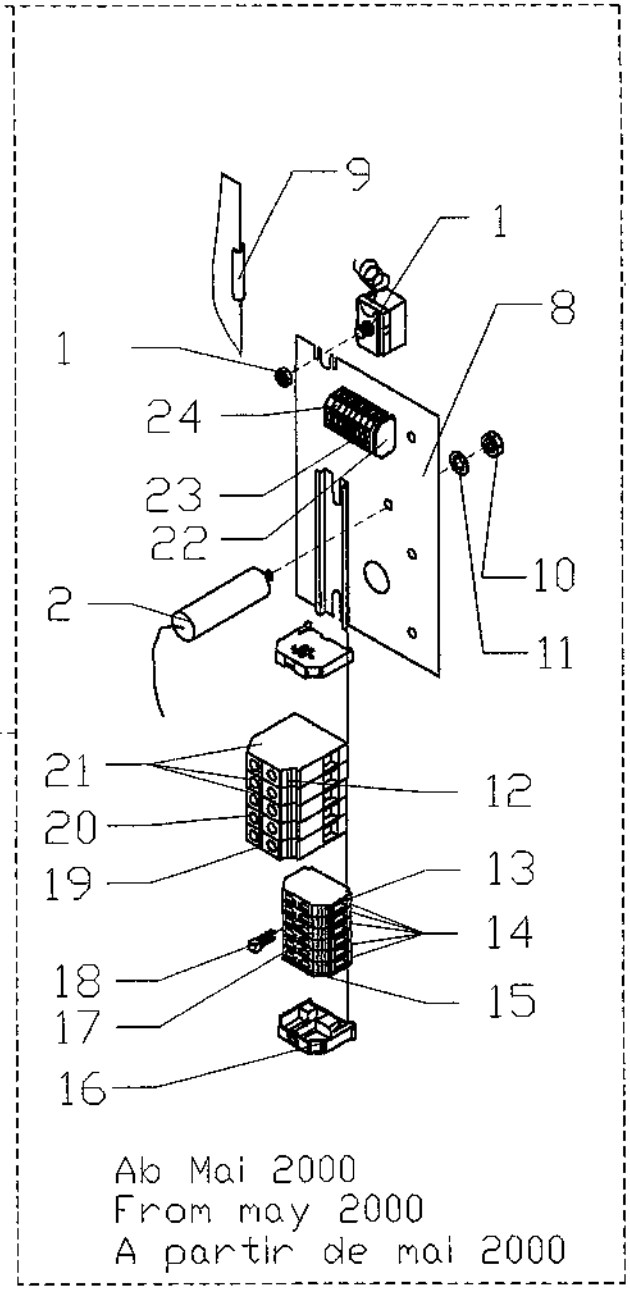

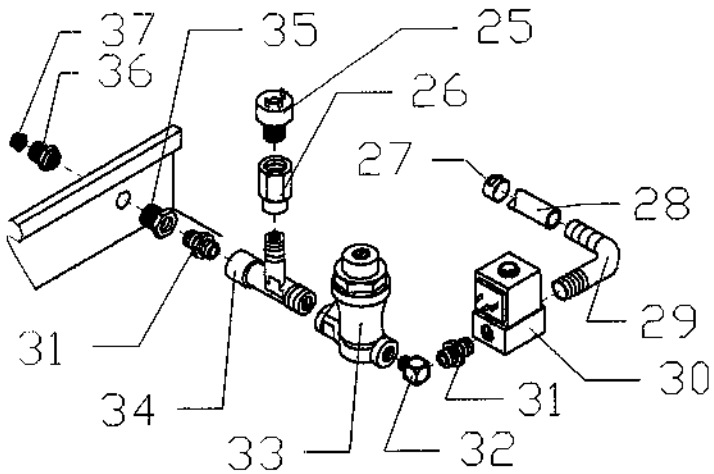

EB40 ab Geräte Nr. 510
EB40 from unit No. 510
EB40 a partir de e'appareil No. 510

EB60 ab Geräte Nr. 628
EB60 from unit No. 628
EB60 a partir de e'appareil No. 628

Backmaster EB EBC

Зип Общепит
www.zip-
+7(812) 987 08-81

Pos.	Artikel Nr.	Teile/Benennung		EB 40	EB 60	EB 100	EBC 80	EBC 100	EBC 120	electron	digital
1	336030	Sicherheitstemp. Begrenz.	1-polig 305	●	●	●	●	●	●	●	●
2	598113	Umbausatz Entstörplatine	6-11/10-11	●	●	●	●	●	●	●	●
3	505032	6kt-Mutter ISO 4032	M6 V4A D	●	●	●	●	●	●	●	●
4	510015	Zahnscheibe DIN 6797 J6,4	V2A	●	●	●	●	●	●	●	●
5	412081	Distanzhülse Kunststoff	D-6,5; d-3,	●	●	●	●	●	●	●	●
6	500043	6kt-Schraube ISO 4017	M6x10 V2A	●	●	●	●	●	●	●	●
7	500091	Linsenschraube DIN 7985	M4x8 V2A	●	●	●	●	●	●	●	●
8	482036	Elektromontageblech EB		●	●	●	●	●	●	●	●
9	600326	VBG O-Ring	Montage S	●	●	●	●	●	●	●	●
10	505008	6kt-Mutter DIN 439	M12 V4A n	●	●	●	●	●	●	●	●
11	510018	Zahnscheibe DIN 6797	J 12,5 V2A	●	●	●	●	●	●	●	●
12	362045	Bezeichnungsstreifen	L1-PE	●	●	●	●	●	●	●	●
13	362070	Bezeichnungsstreifen	Beschriftun				●	●	●	●	●
14	371022	Universalklemme grau 4qmm					●	●	●	●	●
15	371025	Abschlußplatte für	Universalkl				●	●	●	●	●
16	371010	Endklammer für Schiene	35 DIN				●	●	●	●	●
17	371021	Universalklemme blau 4qmm					●	●	●	●	●
18	371014	Querbrücker 4qmm (281)					●	●	●	●	●
19	371063	Schutzleiterklemme 10qmm	zum Schra	●	●	●	●	●	●	●	●
20	371069	Neutralleiterklemme 10qmm	zum Schra	●	●	●	●	●	●	●	●
21	371064	Durchgangsklemme grau	10qmm zu	●	●	●	●	●	●	●	●
22	371039	Abschlußplatte m. Rastfuß		●	●	●	●	●	●	●	●
23	371040	Klemme 2-Leiter grau	mit Rastfuß	●	●	●	●	●	●	●	●
24	371041	Klemme 2-Leiter grau	mit Flansch	●	●	●	●	●	●	●	●
25	320078	Druckschalter 0,4bar		●	●	●	●	●	●	●	●
27	422065	Spannschelle Edelstahl	wiederverw	●	●	●	●	●	●	●	●
28	444013	Siliconschlauch 9,5x2,5mm	beschichtet	●	●	●	●	●	●	●	●
29	440007	Winkeleinschraubtülle		●	●	●	●	●	●	●	●
30	436040	Magnetventil/Modell 2000	2/2 Wege-(	●	●	●	●	●	●	●	●
31	440092	Doppelnippel G 1/8		●	●	●	●	●	●	●	●
32	440083	Winkel-Einschraubstutzen		●	●	●	●	●	●	●	●
33	436009	Druckminderer 1/8		●	●	●	●	●	●	●	●
34	440131	T-Stück (kegelig) G1/8		●	●	●	●	●	●	●	●
35	440046	Reduzierniippel	G 3/8 - G 1	●	●	●	●	●	●	●	●
36	440039	Reduzierstück	A 3/4" I 3/8	●	●	●	●	●	●	●	●
37	418017	Schmutzsieb		●	●	●	●	●	●	●	●

Pos.	Artikel Nr.	Teile/Benennung	EB 40	EB 60	EB 100	EBC 80	EBC 100	EBC 120	electron	digital

Für Ihre Notizen :

Зип Общепит
vsezip.ru
+7(812)987-08-81

Für Ihre Notizen :

Зип Общепит
vsezip.ru
+7(812)987-08-81

Зип Общепит
vsezip.ru
+7(812)987-08-81

eloma

Eloma GmbH
Otto-Hahn-Straße 10
82212 Maisach
Germany

Phone: +49 (0) 8141 395-0
Fax: +49 (0) 8141 395-130
www.eloma.com
info@eloma.com

22.10.2002

Artikel Nr. 906053

Ausgabe leh/bre/08/01

Technische Änderungen vorbehalten !