EXPLODED VIEWS

Зип Общепит
vsezip.ru
+7(812)987-08-81

04-04 EXPLODED PR.G-E-V

Printing date: **25/08/2016**

Validity

From Serial Number: 28353 / 2011

To Serial Number: All untill printing date

Legend: **C** = Suggested spare parts

EXPLODED VIEWS

Зип Общепит
vsezip.ru
+7(812)987-08-81

This page intentionally left blank

04-04 EXPLODED PB G-E-V

Зип Общепит
vsezip.ru
+7(812)987-68-81

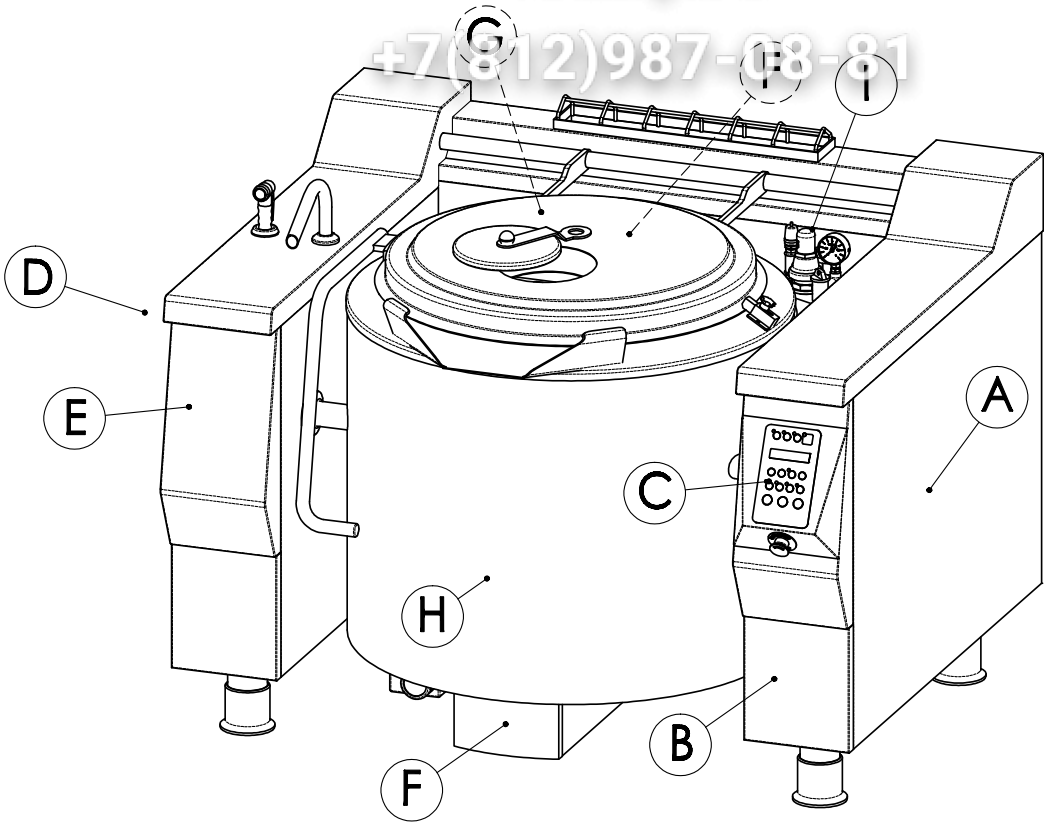

Pos.	Data sheet
A	02-0012 05-0112 05-0200 05-0210 05-0220 05-0230
B	05-0042 05-0052 05-0056
C	05-0010
D	04-0012 04-0070 04-0020 04-0030 03-0010 04-0100
D-E	05-0100 05-0110
F	02-0050
G	02-0082
H	06-0030 06-0040 04-0110
I	03-0020 05-0120 05-0130

Зип Общепит
wsezip.ru
+7(812)987-08-81

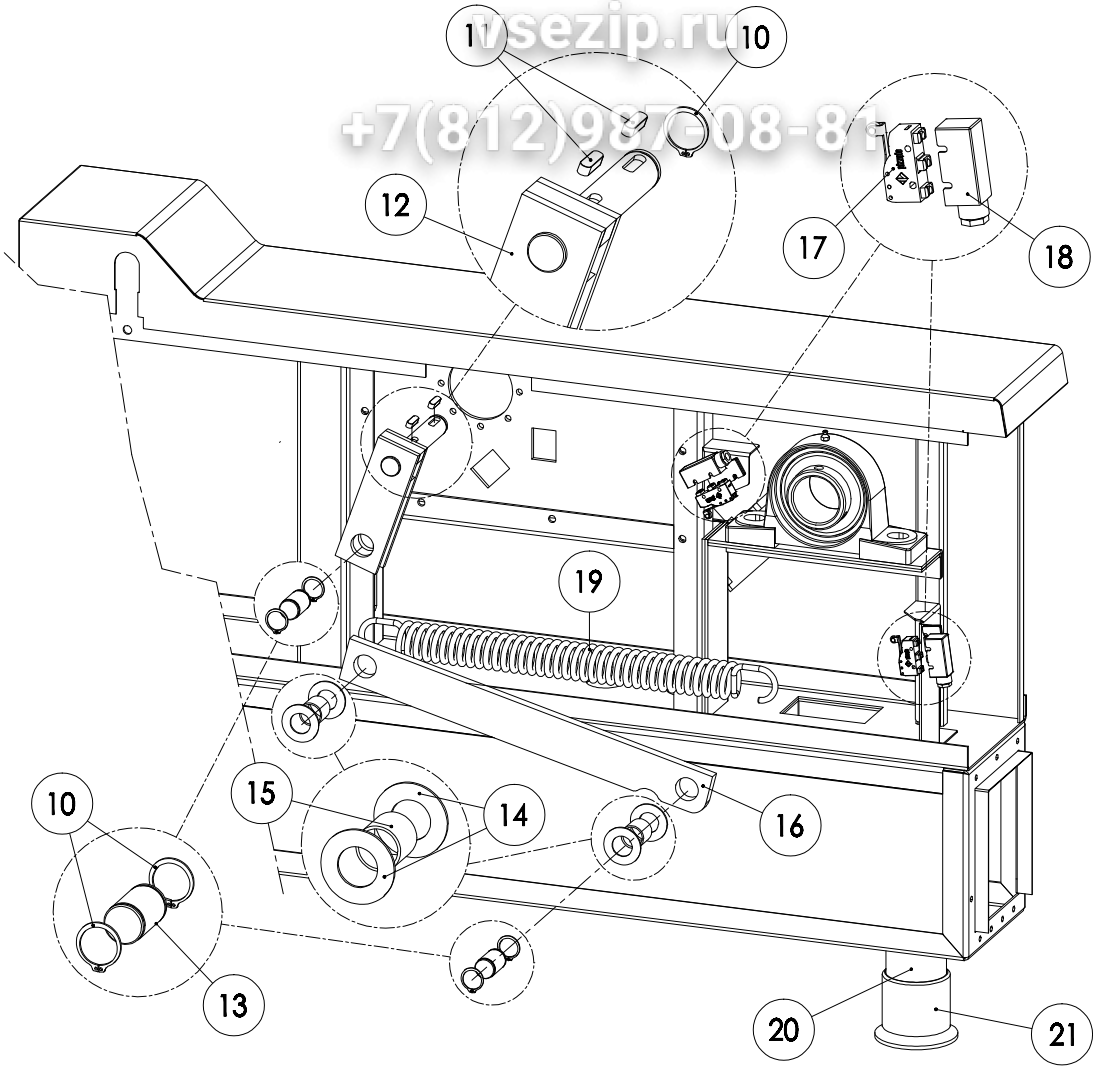

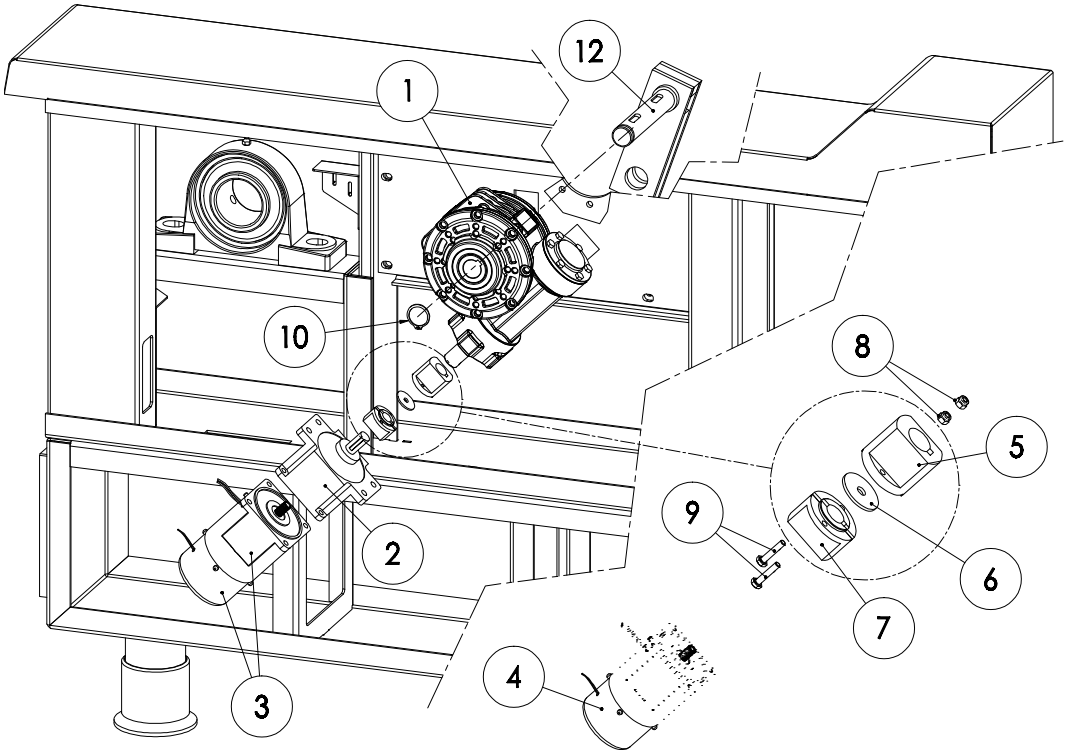

Зип Общепит
vsezip.ru
+7(812)987 08 81

Pos.	Model	UM	Qty	C	Model	Description	Price Eur
01		PZ	1,00		40300022	REDUCTION VF.72 P1 30 HS B3	
02		PZ	1,00		40300047	REDUCTION GEAR 5GU150K	
03		PZ	1,00		40300050	SINGLE-PHASE MOTOR W/BRAKE 5RK60GU-	
04		PZ	1,00		40300018	BRAKE MOTOR 5RK60GU-CMF	
05		PZ	1,00		SC1220-00	BUSH D.19	
06		PZ	1,00		SMB0138-00	PLANE WASHER A2 M6 6,25X24 UNI659	
07		PZ	1,00		SC1222-00	BUSH D.15	
08		PZ	1,00		10200352	NUT INOX A2 M4 UNI7474	
09		PZ	1,00		10100068	SCREW A2 M4X16 UNI5739	
10		PZ	1,00		10500050	INOX RING SHAFT D.28 UNI7435	
11		PZ	1,00		10300073	PARALLEL KEY 8X7X30 A2 UNI6604/A	
12		PZ	1,00		SC1064-00	SET LEVER SHAFT REDUCTOR CBT/PR	
13		PZ	1,00		SC1062-00	PERNO X BIELLA RIBALTAMENTO CBT/PR	
14		PZ	1,00		SC1066-00	RONDELLA IN POLIETILENE D.58/28,5	
15		PZ	1,00		20400536	BUSH GLICODUR D28-32 L=15	
16		PZ	1,00		SC1060-00	TILTING ROD CBT/PR	
17		PZ	1,00	C	40100010	ROUND LIMIT SWITCH MS42	
18		PZ	1,00		10600150	BOOTLEG PG9 LIMIT-SWITCH	
19	CBT.310	PZ	1,00		20500030	SPRING FOR TILTING OF PAN BRA.D.7	
19	PR.250-320-500	PZ	1,00		20500030	SPRING FOR TILTING OF PAN BRA.D.7	
20		PZ	1,00		SC1246-00	FOOT D.80 SET	
20	PR.500	PZ	1,00		SC1240-00	FOOT D.101,6 SET PR..500	
21		PZ	1,00		SC1248-00	PVC COVERING FOR FOOT D.80	
21	PR.500	PZ	1,00		SC1242-00	PVC COVERING FOR FOOT D.101,6	

Зип Общепит
vsezip.ru
+7(812)987-08-81

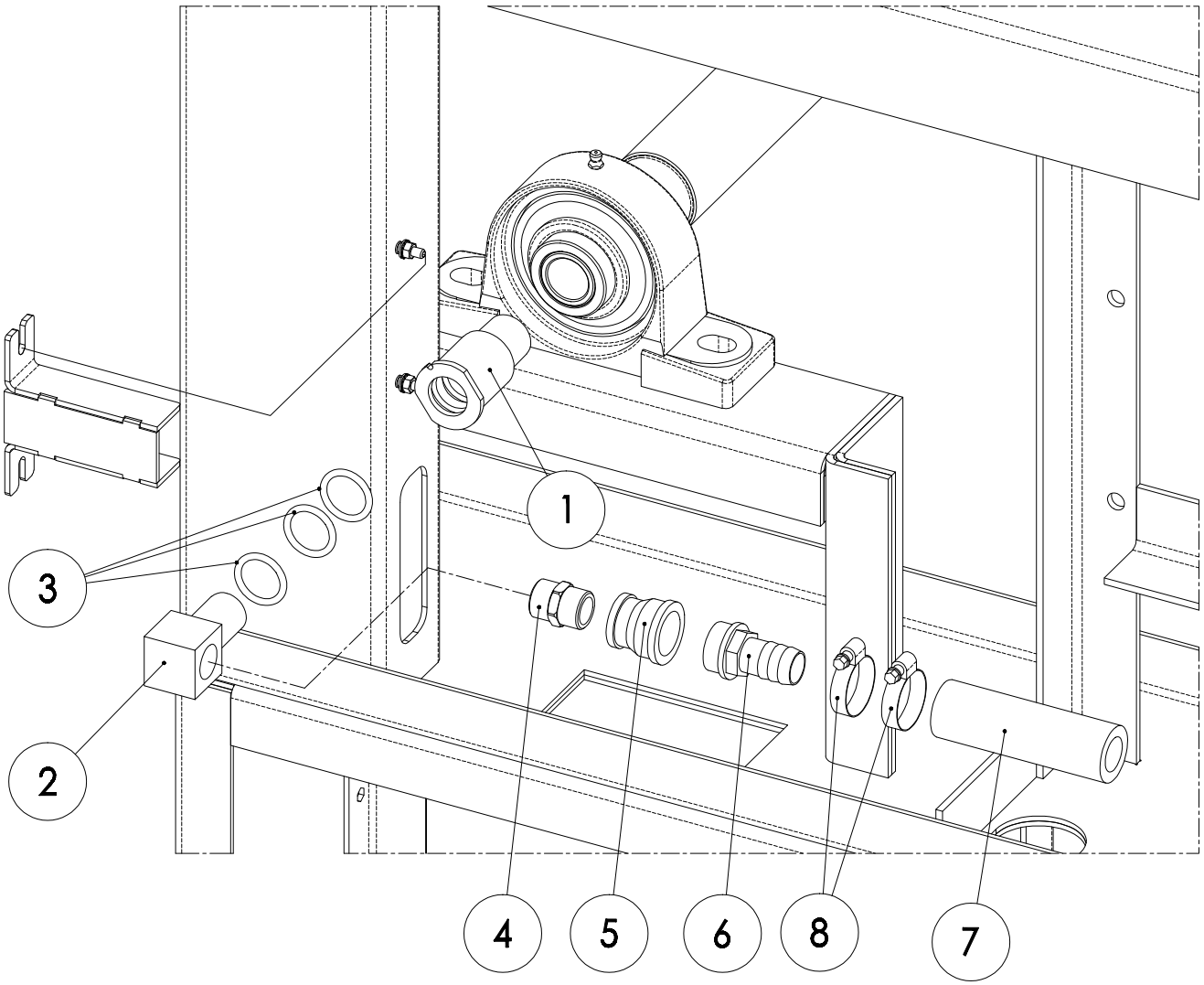

Зип Общепит
vsezip.ru
+7(812)987-08-81

Pos.	Model	UM	Qty	C	Model	Description	Price Eur
01		PZ	1,00		SC0340-00	EXTERNAL JOINT-ELEMENT	
02		PZ	1,00		SC0342-00	INTERNAL JOINT-ELEMENT	
03		PZ	1,00		10500114	O-RING DI.23,4X3,53 R.131 E540-80	
04		PZ	1,00		10400004	NIPPLE M-M 1/2"	
05		PZ	1,00		10400046	REDUCING SLEEVE 3/4F-1/2F"	
06		PZ	1,00		10400136	RUBBER-HOLDER M 3/4"X20 IN BRASS	
07		MT	0,80		10600033	RUBBER HOSE FOR FOOD D.19-31 STEAM	
08		PZ	1,00		10300022	HOSE CLAMP D.20-32 INOX	

Завод Общепит
vsezip.ru
+7(812)987-08-81

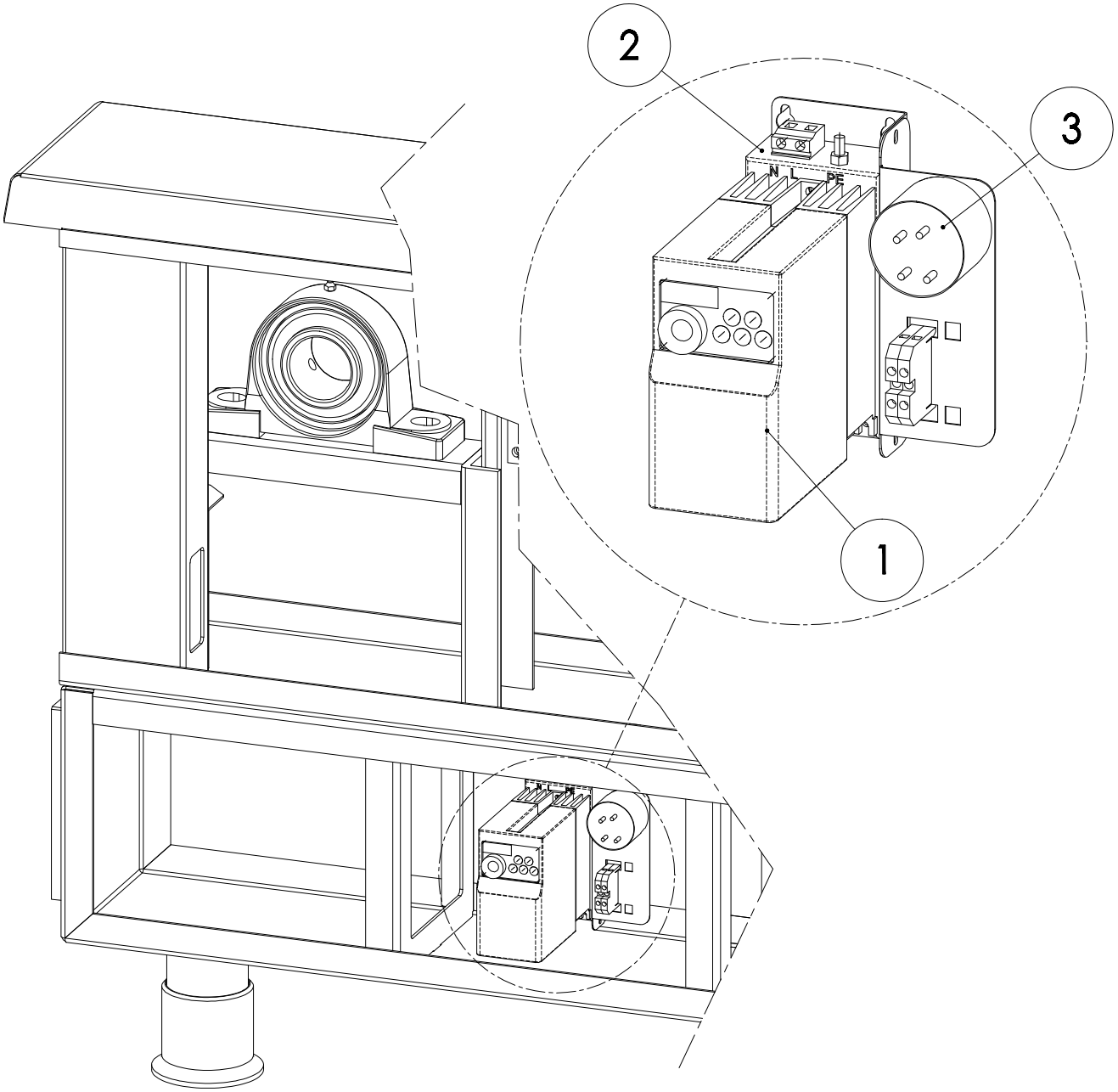

Emp Общепит
vsezip.ru
+7(812)987-08-81

Pos.	Model	UM	Qty	C	Model	Description	Price Eur
01	230V;400V3N~	PZ	1,00		40700062	INVERTER MONO 0,4K FR-D720S-025-EC	
01	400÷480V3~	PZ	1,00		40700082	INVERTER TRIF. 0,75K FR-D740-022-EC	
02	230V;400V3N~	PZ	1,00		40800070	FILTER INTERFERENCE FS520S 0,4-0,75	
02	400÷480V3~	PZ	1,00		40800082	FILTER INTERFER. FFR-CSH-036-8A-RF1	
03	230V;400V3N~	PZ	1,00		40800096	INDUCTANCE D.41X21 2X2.8MH/8A	
03	400÷480V3~	PZ	1,00		40800098	INDUTTANZA D.41X21 3X2.8MH/12A	

ЗипОбщепит
vsezip.ru
+7(812)987-08-81

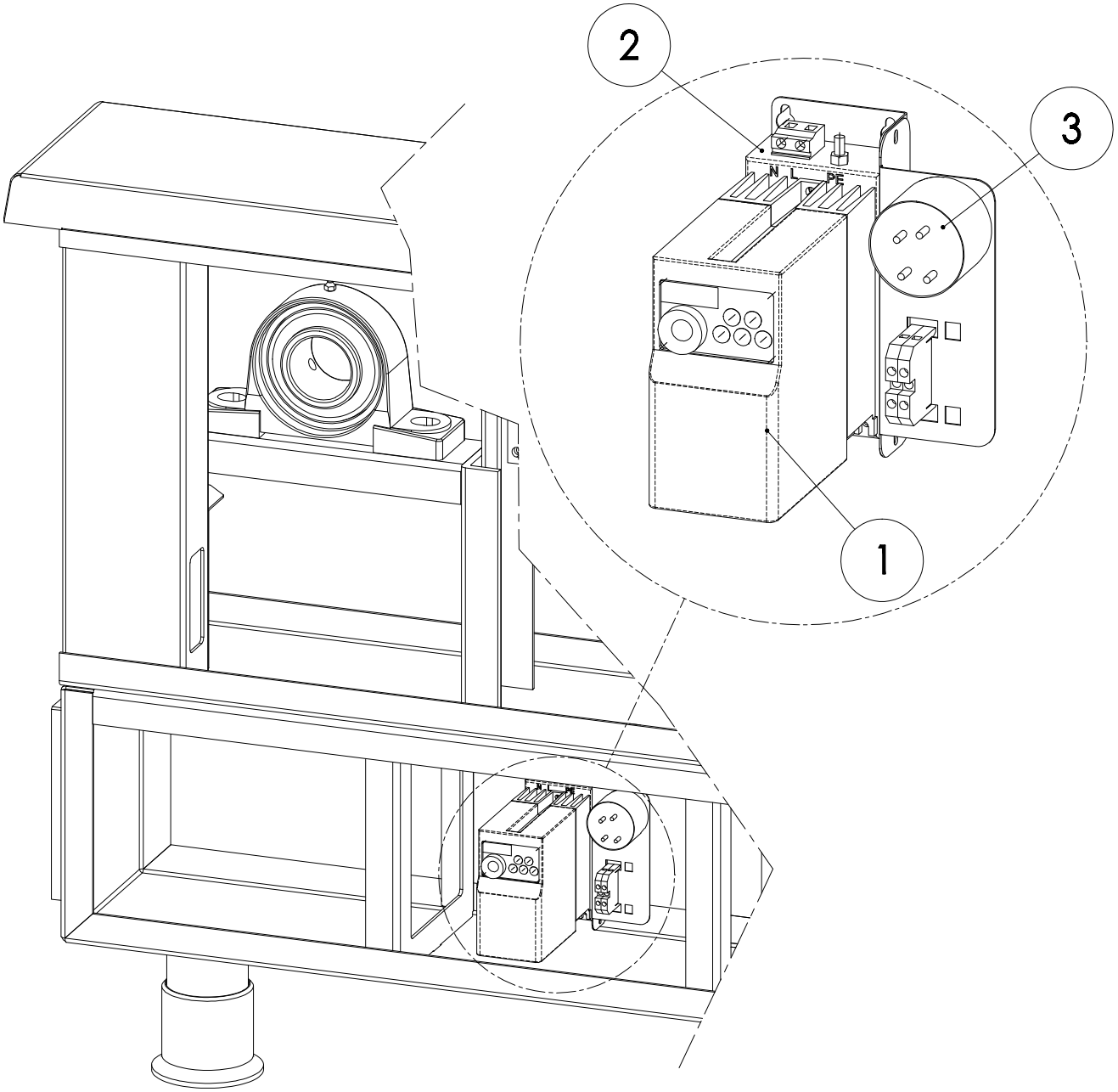

ЗиП Общепит
vsezip.ru
+7(812)987-08-81

Pos.	Model	UM	Qty	C	Model	Description	Price Eur
01	230V;400V3N~	PZ	1,00		40700068	INVERTER FR-S 520S 0,75 K	
01	400÷480V3~	PZ	1,00		40700082	INVERTER FRIF. 0,75K FR-D740-022-EC	
02	230V;400V3N~	PZ	1,00		40800070	FILTER INTERFERENCE FS520S 0,4-0,75	
02	400÷480V3~	PZ	1,00		40800082	FILTER INTERFER. FFR-CSH-036-8A-RF1	
03	230V;400V3N~	PZ	1,00		40800096	INDUCTANCE D.41X21 2X2.8MH/8A	
03	400÷480V3~	PZ	1,00		40800098	INDUTTANZA D.41X21 3X2.8MH/12A	

ЗипОбщепит
vsezip.ru
+7(812)987-08-81

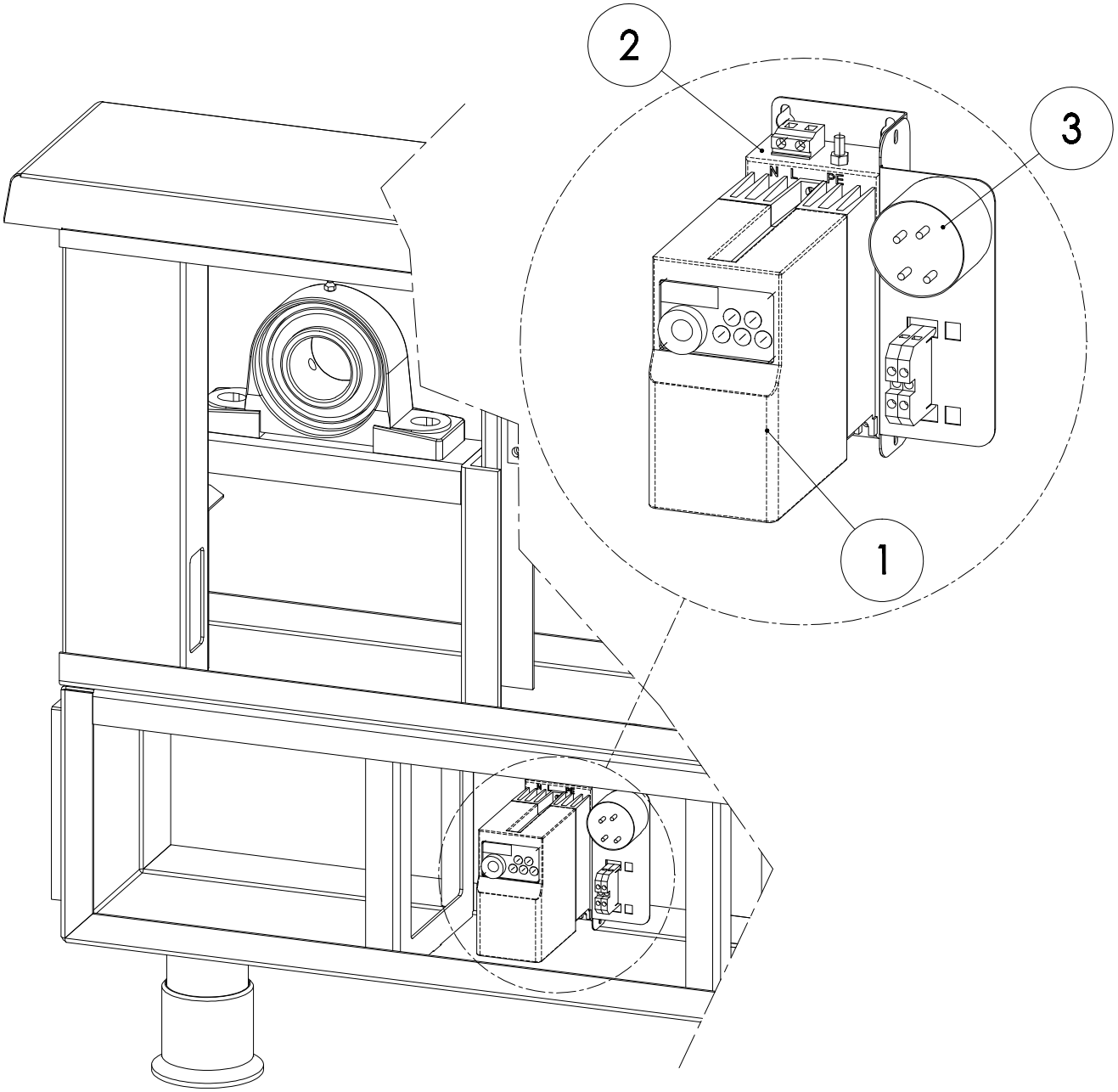

ЗиП Общепит
vsezip.ru
+7(812)987-08-80

Pos.	Model	UM	Qty	C	Model	Description	Price Eur
01	230V;400V3N~	PZ	1,00		40700065	INVERTER MONO 1,5K FR-D720S-070-EC	
01	400÷480V3~	PZ	1,00		40700064	INVERTER TRIF. 2,2K FR-D740-050-EC	
02	230V;400V3N~	PZ	1,00		40800081	FILTER INTERFER. FFR-CS-080-20A-RF1	
02	400÷480V3~	PZ	1,00		40800084	FILTER INTERFER.FFR-CSH-080-16A-RF1	
03	230V;400V3N~	PZ	1,00		40800096	INDUCTANCE D.41X21 2X2.8MH/8A	
03	400÷480V3~	PZ	1,00		40800098	INDUTTANZA D.41X21 3X2.8MH/12A	

Завод Общепит
vsezip.ru
+7(812)987-08-81

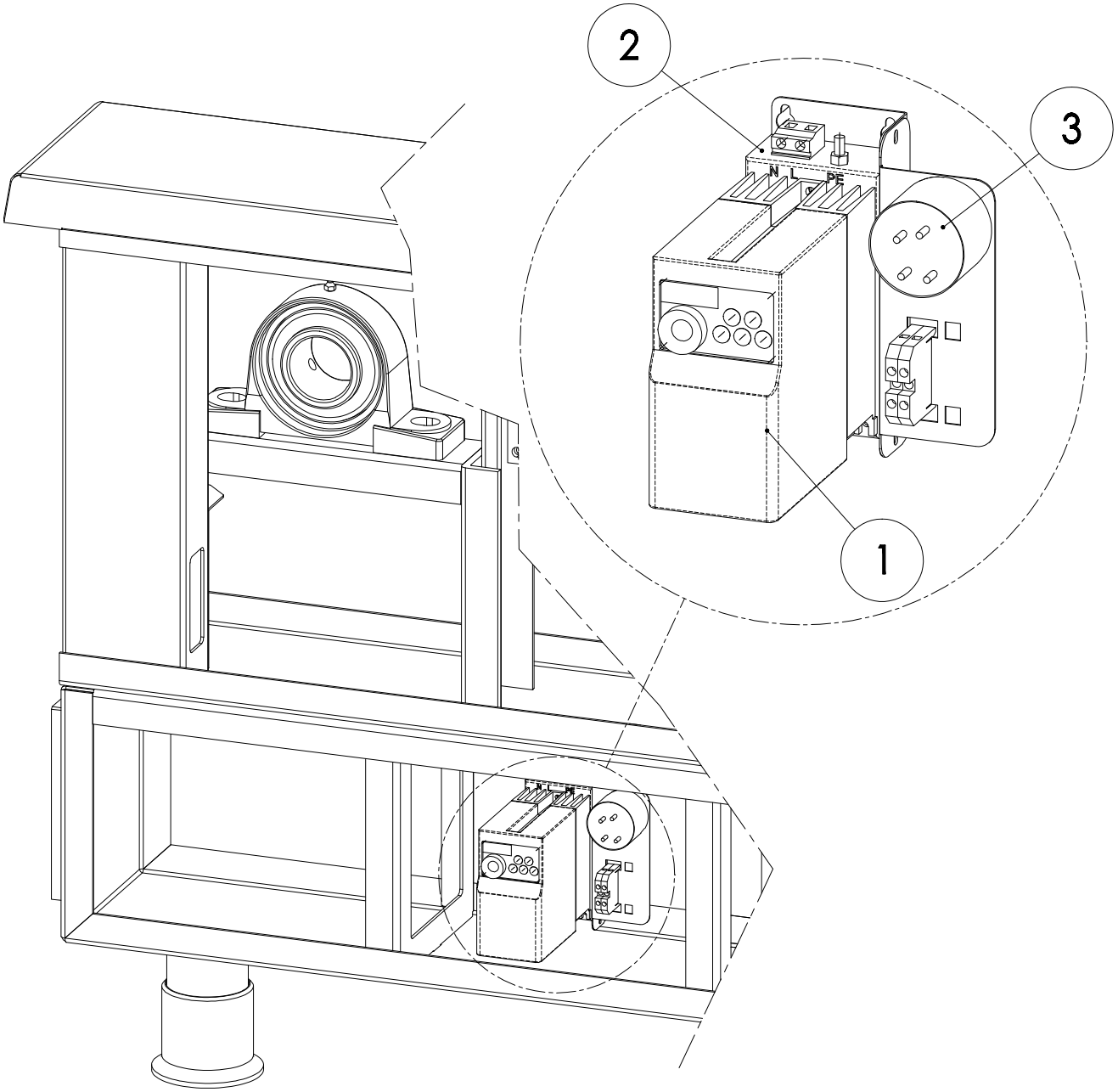

Emp Общепит
vsezip.ru
+7(812)987-08-80

Pos.	Model	UM	Qty	C	Model	Description	Price Eur
01	230V;400V3N~	PZ	1,00		40700065	INVERTER MONO 1,5K FR-D720S-070-EC	
01	400÷480V3~	PZ	1,00		40700064	INVERTER TRIF. 2,2K FR-D740-050-EC	
02	230V;400V3N~	PZ	1,00		40800081	FILTER INTERFER. FFR-CS-080-20A-RF1	
02	400÷480V3~	PZ	1,00		40800084	FILTER INTERFER.FFR-CSH-080-16A-RF1	
03	230V;400V3N~	PZ	1,00		40800096	INDUCTANCE D.41X21 2X2.8MH/8A	
03	400÷480V3~	PZ	1,00		40800098	INDUTTANZA D.41X21 3X2.8MH/12A	

Завод Общепит
vsezip.ru
+7(812)987-08-81

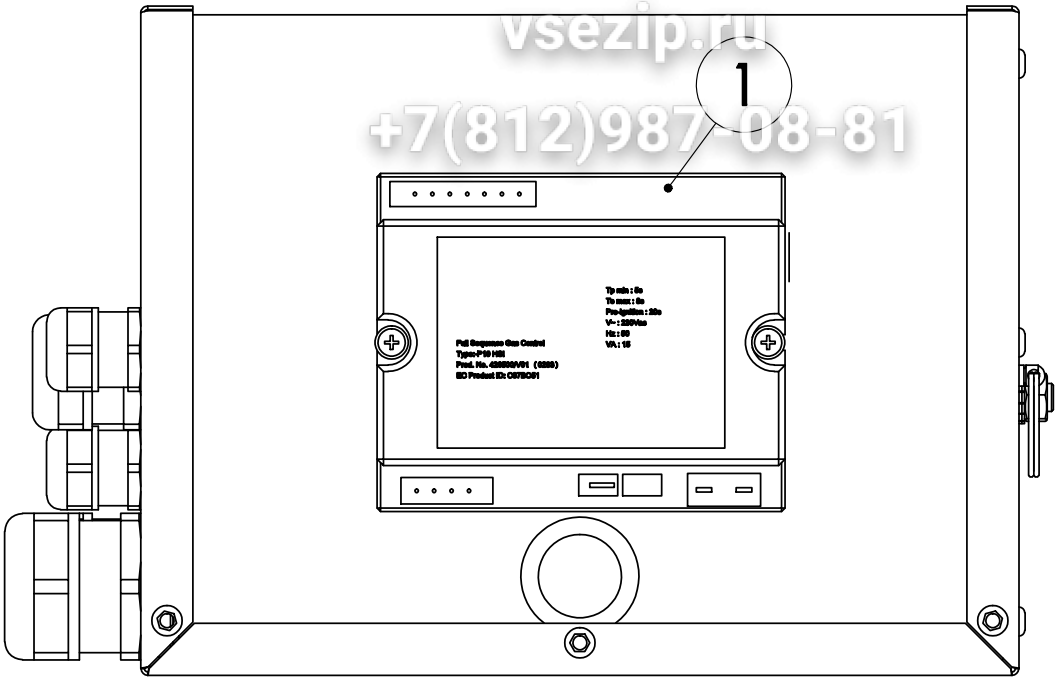

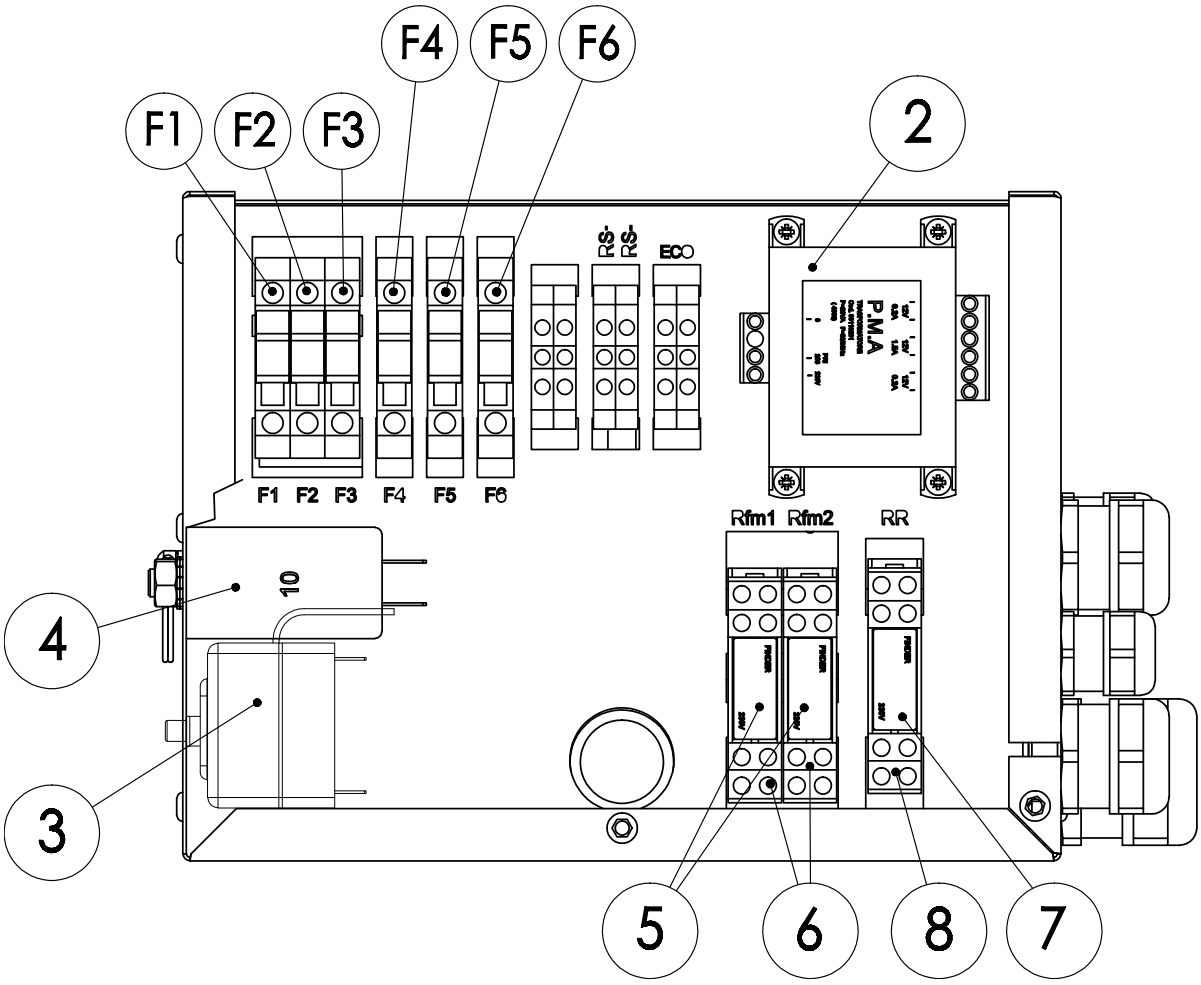

Завт Общепит
vsezip.ru
+7(812)987 08 81

Pos.	Model	UM	Qty	C	Model	Description	Price Eur
01		PZ	1,00	C	30100026	STARTING DEVICE PACTROL X194/245	
02		PZ	1,00		40200[illegible]1	TRANSFORMER 24VA LCD CARD	
03	CBTG-PRIG	PZ	1,00	C	40100041	SAFETY THERMOSTAT 180°C 3F	
03	PRDG	PZ	1,00	C	40100062	SAFETY THERMOSTAT 360°C 3F	
04		PZ	1,00		40300042	CONDENSER 6,3MF 450V WITH TANG	
05		PZ	1,00	C	40100054	RELAY 8A 2N0 230VAC	
06		PZ	1,00		40100055	RELAY SOCKET DIN RAIL X 40100054	
07	PRIG + SCT2	PZ	1,00	C	40100054	RELAY 8A 2N0 230VAC	
08	PRIG + SCT2	PZ	1,00		40100055	RELAY SOCKET DIN RAIL X 40100054	
09	F1	PZ	1,00	C	40200050	RAPID FUSE 5X20 200MA F-250V	
10	F2	PZ	1,00	C	40200084	DELAYED FUSE 5X20 3,15A T-250V	
11	F3 <28.02.2012	PZ	1,00	C	40200080	DELAYED FUSE 5X20 500MA T-250V	
11	F3 >01.03.2012	PZ	1,00	C	40200054	DELAYED FUSE 5X20 1,25A T-250V	
12	F4	PZ	1,00	C	40200086	DELAYED FUSE 5X20 12,5A T-250V	
12	F4 PR.070-180M	PZ	1,00	C	40200086	DELAYED FUSE 5X20 12,5A T-250V	
12	F4 PR.250-500M	PZ	1,00	C	40200087	DELAYED FUSE 5X20 20 A T-250V	
13	F5	PZ	1,00	C	40200054	DELAYED FUSE 5X20 1,25A T-250V	
14	F6 +(DAPC0230)	PZ	1,00	C	40200088	RAPID FUSE 5X20 16A F-250V	

Эм Общепит
vsezip.ru
+7(812)987-08-81

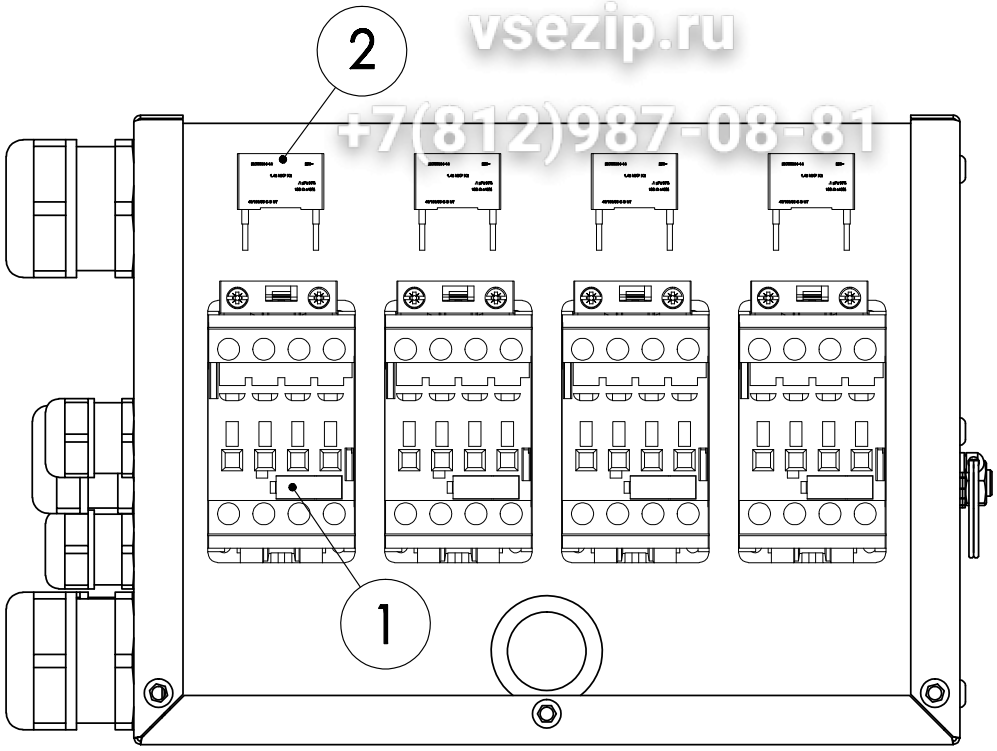

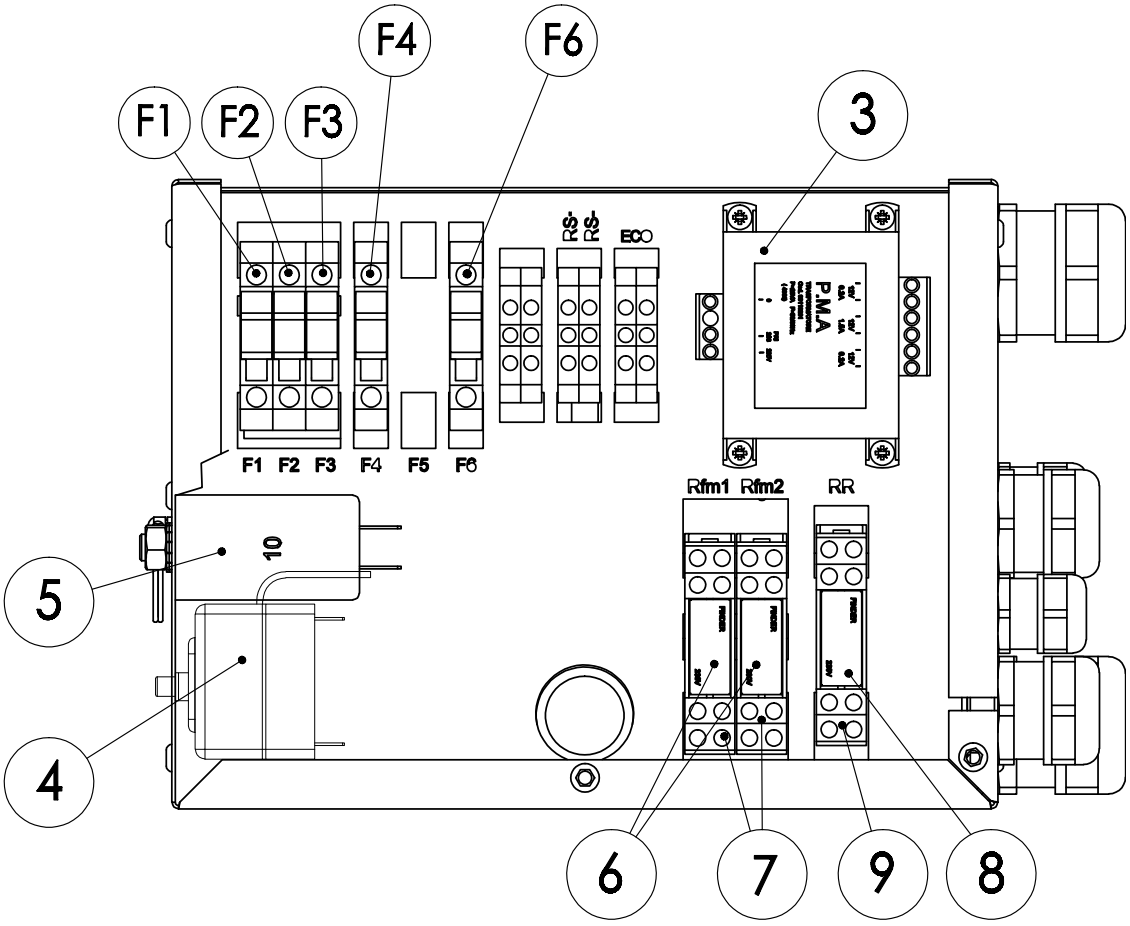

Эм Общепит
vsezip.ru
+7(812)987-08-81

Pos.	Model	UM	Qty	C	Model	Description	Price Eur
01		PZ	1,00	C	40100024	CONTACTOR 30A 4P AC1-230V/50HZ	
02		PZ	1,00		40100082	ARCH INTERFERENCE BLANKER 0,1MF (P)	
03		PZ	1,00		40200131	TRANSFORMER 24VA LCD CARD	
04		PZ	1,00	C	40100041	SAFETY THERMOSTAT 180°C 3F	
05		PZ	1,00		40300042	CONDENSER 6,3MF 450V WITH TANG	
06		PZ	1,00	C	40100054	RELAY 8A 2N0 230VAC	
07		PZ	1,00		40100055	RELAY SOCKET DIN RAIL X 40100054	
08	PRIE + SCT2	PZ	1,00	C	40100054	RELAY 8A 2N0 230VAC	
09	PRIE + SCT2	PZ	1,00		40100055	RELAY SOCKET DIN RAIL X 40100054	
10	F1	PZ	1,00	C	40200050	RAPID FUSE 5X20 200MA F-250V	
11	F2	PZ	1,00	C	40200084	DELAYED FUSE 5X20 3,15A T-250V	
12	F3 <28.02.2012	PZ	1,00	C	40200080	DELAYED FUSE 5X20 500MA T-250V	
12	F3 >01.03.2012	PZ	1,00	C	40200054	DELAYED FUSE 5X20 1,25A T-250V	
13	F4 CBT.090-310	PZ	1,00	C	40200086	DELAYED FUSE 5X20 12,5A T-250V	
13	F4 PR.070-180M	PZ	1,00	C	40200086	DELAYED FUSE 5X20 12,5A T-250V	
13	F4 PR.250-500M	PZ	1,00	C	40200087	DELAYED FUSE 5X20 20 A T-250V	
14	F6 +(DAPC0230)	PZ	1,00	C	40200088	RAPID FUSE 5X20 16A F-250V	

Зип Общепит
vsezip.ru
+7(812)987-08-81

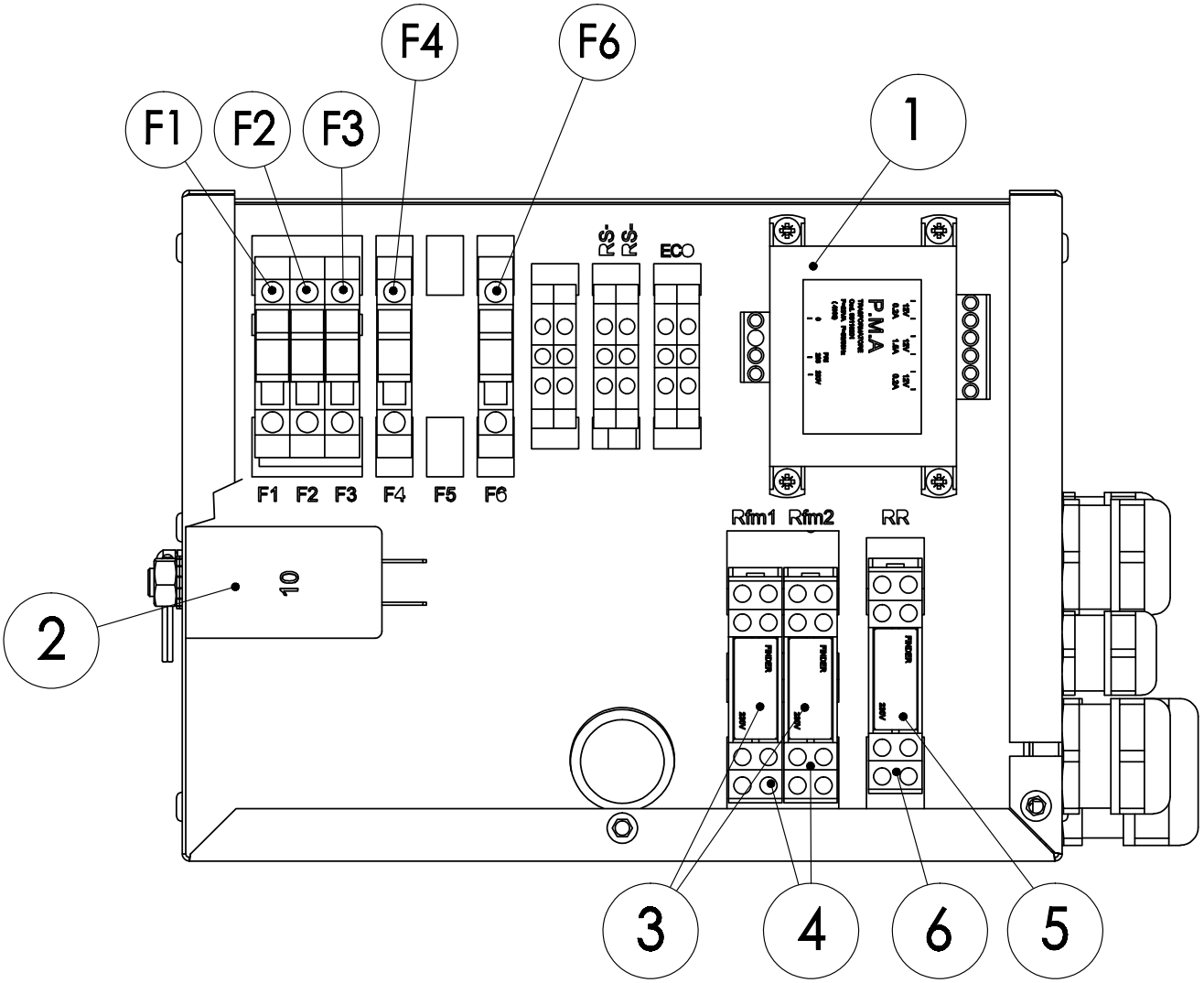

Зип Общепит
vsezip.ru
+7(812)987-08-81

Pos.	Model	UM	Qty	C	Model	Description	Price Eur
01		PZ	1,00		40200131	TRANSFORMER 24VA LCD CARD	
02		PZ	1,00		40300042	CONDENSER 0,3MF 450V WITH TANG	
03		PZ	1,00	C	40100054	RELAY 8A 2N0 230VAC	
04		PZ	1,00		40100055	RELAY SOCKET DIN RAIL X 40100054	
05	PRIV + SCT2	PZ	1,00	C	40100054	RELAY 8A 2N0 230VAC	
06	PRIV + SCT2	PZ	1,00		40100055	RELAY SOCKET DIN RAIL X 40100054	
07	F1	PZ	1,00	C	40200050	RAPID FUSE 5X20 200MA F-250V	
08	F2	PZ	1,00	C	40200084	DELAYED FUSE 5X20 3,15A T-250V	
09	F3	PZ	1,00	C	40200080	DELAYED FUSE 5X20 500MA T-250V	
10	F4 PR.070-180M	PZ	1,00	C	40200086	DELAYED FUSE 5X20 12,5A T-250V	
10	F4 PR.250-500M	PZ	1,00	C	40200087	DELAYED FUSE 5X20 20 A T-250V	
11	F6 +(DAPC0230)	PZ	1,00	C	40200088	RAPID FUSE 5X20 16A F-250V	

Зип Общепит
vsezip.ru
+7(812)987-08-81

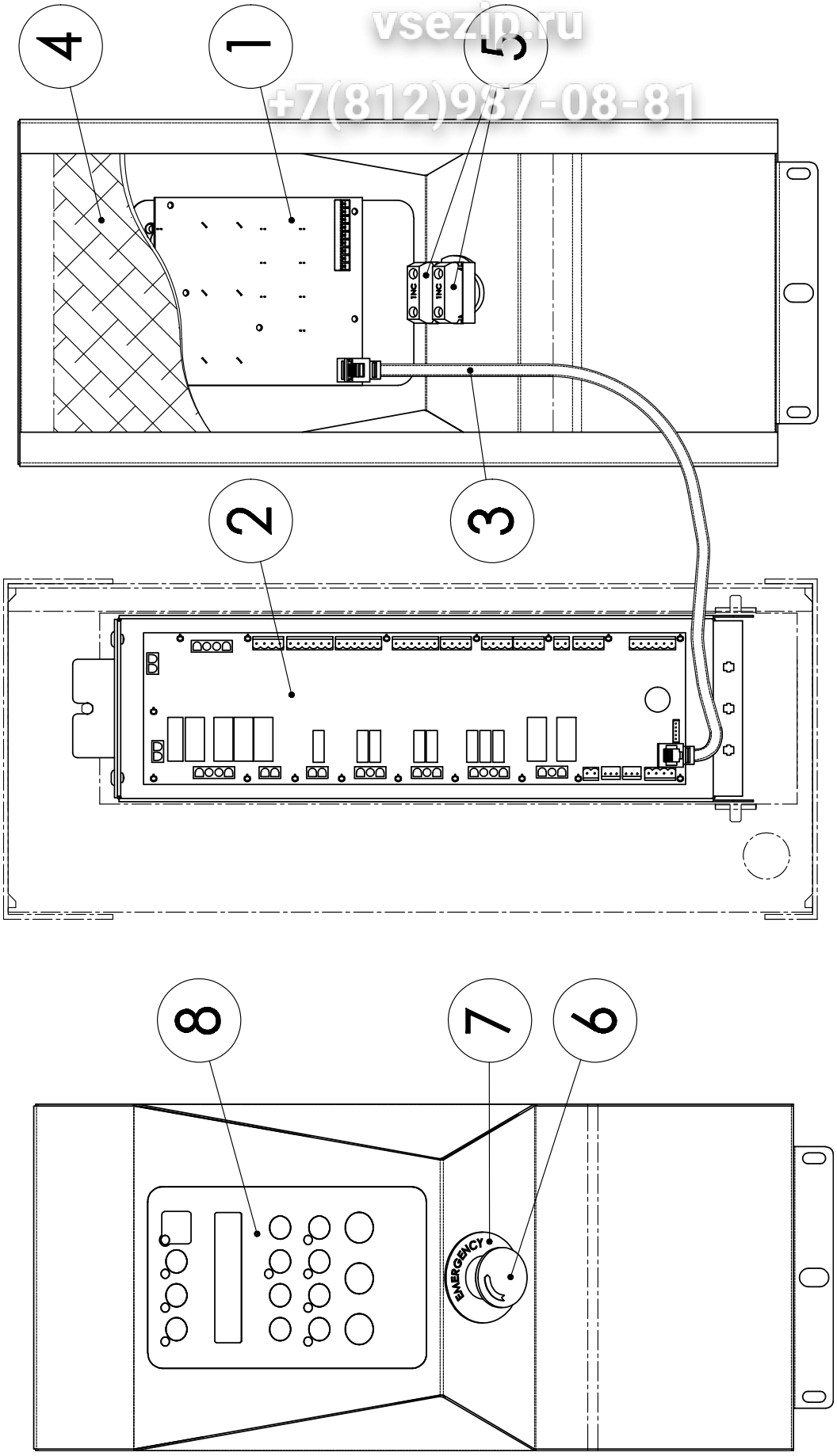

Зип Общепит
vsezip.ru
+7(812)987 08 81

Pos.	Model	UM	Qty	C	Model	Description	Price Eur
01		PZ	1,00	C	40700090	CARD KEYPAD WITH LCD	
02		PZ	1,00	C	40700082	RELAY CARD FOR LCD DIM.	
03		PZ	1,00	C	40800116	TELEPH. CABLE 1 MT CONNECTION CARDS	
04	DIM.190X330 MM	KG	0,23		10600034	SHEET SILICONE WHITE 2MM	
05		PZ	1,00		40100110	GROUP CONTACTS 1NC	
06		PZ	1,00		40100100	EMERGENCY BOTTON D.40	
07		PZ	1,00		10600130	DATA PLATE "EMERGENCY-STOP"	
08	CBT-PRI.M	PZ	1,00		40700320	STENCIL CARD KEYPAD LCD CBT/PRM FIR	
08	CBT-PRI.M	PZ	1,00		40700322	STENCIL CARD KEYPAD LCD CBT/PRI.M	
08	PR..	PZ	1,00		40700300	STENCIL CARD KEYPAD LCD DBR/PR FIRE	
08	PR..	PZ	1,00		40700302	STENCIL CARD KEYPAD LCD DBR/PR	

Зип Общепит
vsezip.ru
+7 (812) 987-08-81

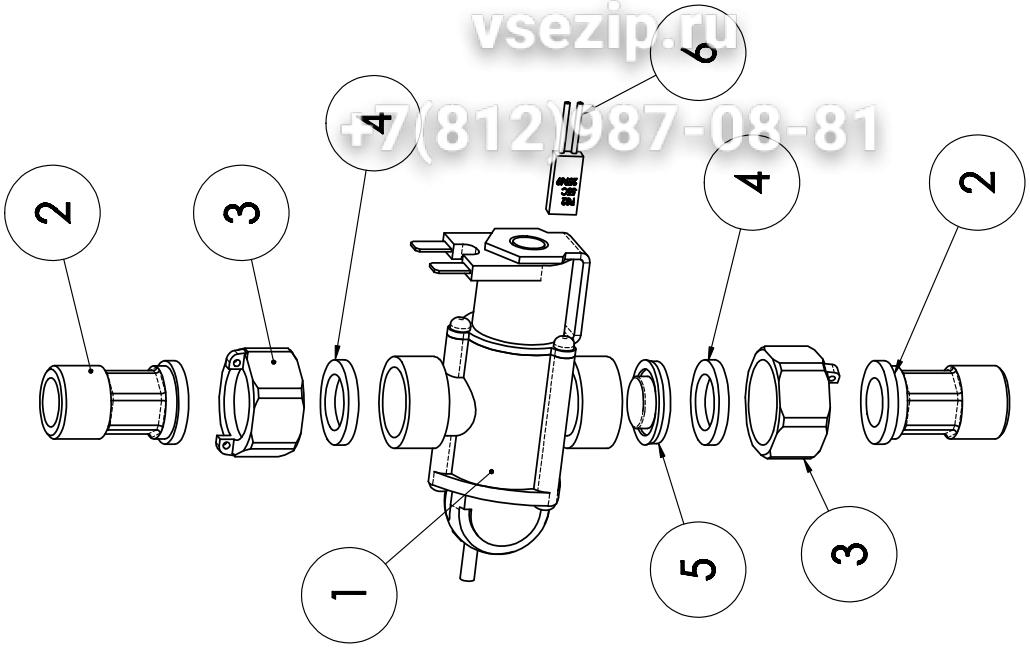

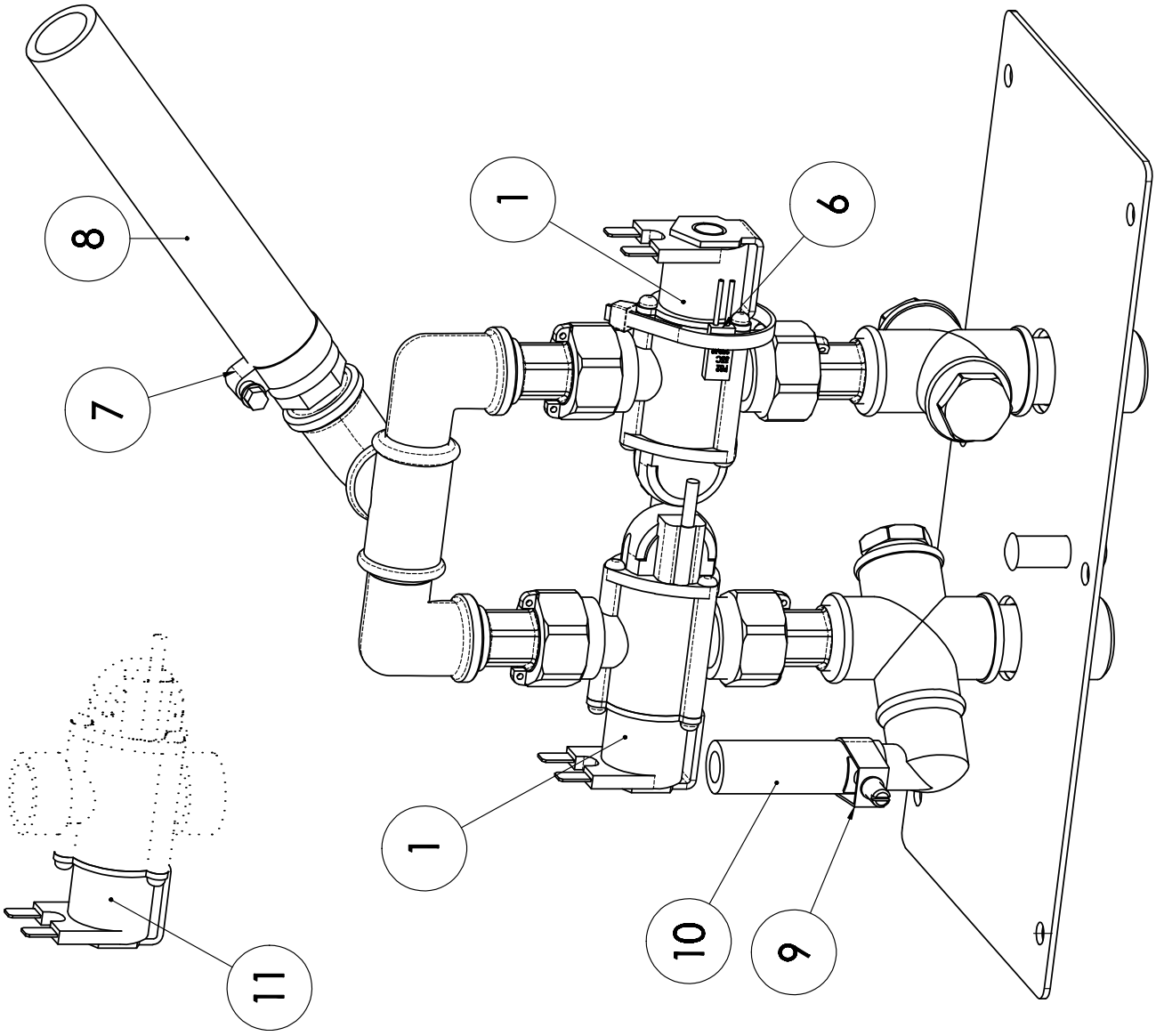

Зип Общепит
vsezip.ru
+7(812)987-08-81

Pos.	Model	UM	Qty	C	Model	Description	Price Eur
01		PZ	1,00	C	30100075/1	MAG.VENTIL COUNT. 3/4" 240V+CONN.	
02		PZ	1,00		10400184	FITTING 1/2" FOR SOLENOID	
03		PZ	1,00		10400182	NUT 3/4" FOR MAG.VENTIL.1/2"	
04		PZ	1,00	C	10500092	BLACK GASKET D.15-25 X RACC.H2O	
05		PZ	1,00	C	30100079	FILTER FOR SOL. VALVE LITER-COUNTER	
06		PZ	1,00		40200057	FUSE 55°C 9.6A	
07		PZ	1,00		10300022	HOSE CLAMP D.20-32 INOX	
08		MT	1,15		10600256	RUBBER HOSE FOR FOOD D.19-26	
09	PRIG-PRIE	PZ	1,00		10300033	HOSE CLAMP D15-19 INOX	
10	PRIG-PRIE	MT	0,60		10600011	RUBBER HOSE D.10X17 GREEN	
11		PZ	1,00		40100043	COIL OF SOLENOID VALVE SERIE R 230V	

Зип Общепит
vsezip.ru
+7(812)987-08-81

(OPTIONAL)
Flow meter group for high temperature

MATR. > 070250.../2016

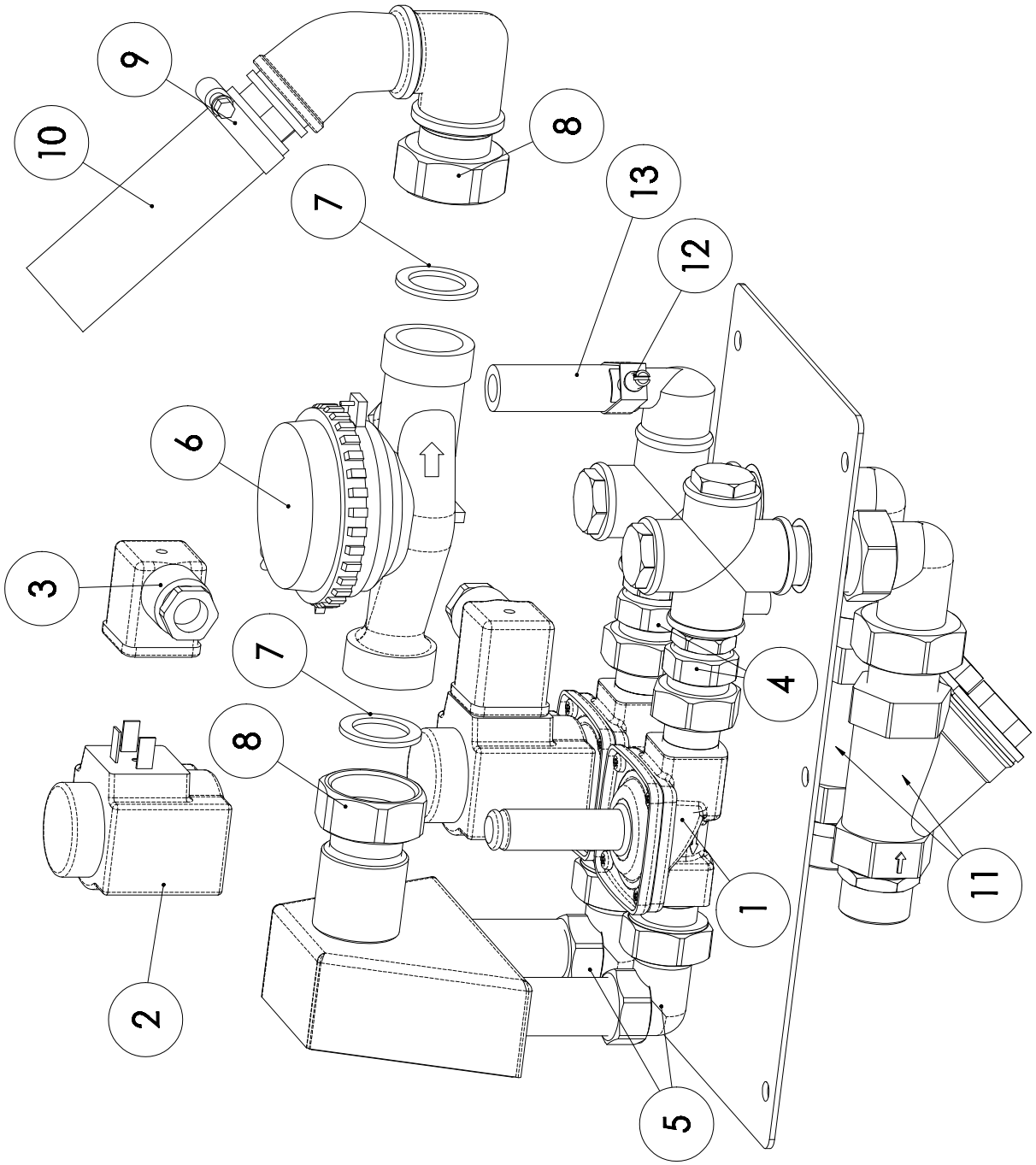

Зип Общепит
vsezip.ru
+7(812)987-08-81

Pos.	Model	UM	Qty	C	Model	Description	Price Eur
01		PZ	1,00		30100132	ELETTROVALVOLA ACQUA 1/2" NC	
02		PZ	1,00		30100100	BOBINA COLLAZZURRO ELETTROV.DANFOSS	
03		PZ	1,00		40100072	CONNETT.GRIGIO ELETTROV.IP65 PG11	
04		PZ	1,00		10400183	BOCCH. M/F DIRITTO OTT.1/2"	
05		PZ	1,00		10400181	CURVE M/F 90° IN BRASS 1/2"	
06		PZ	1,00	C	30100120	CONTALITRI AD IMPULSI DN20 2,5M3/H	
07		PZ	1,00		10500063	GUARNIZ.VERDE 1" 30X21X2	
08		PZ	1,00		10400187	CODOLO DIRITTO 1"F-3/4"M OTTONE SB.	
09		PZ	1,00		10300022	HOSE CLAMP D.20-32 INOX	
10		MT	1,15		10600256	RUBBER HOSE FOR FOOD D.19-26	
11		PZ	1,00		30300046	FILTER H2O F-F 3/4"	
12	PRIG-PRIE	PZ	1,00		10300033	HOSE CLAMP D15-19 INOX	
13	PRIG-PRIE	MT	0,60		10600011	RUBBER HOSE D.10X17 GREEN	

Зип Общепит
vsezip.ru
+7(812)987-08-81

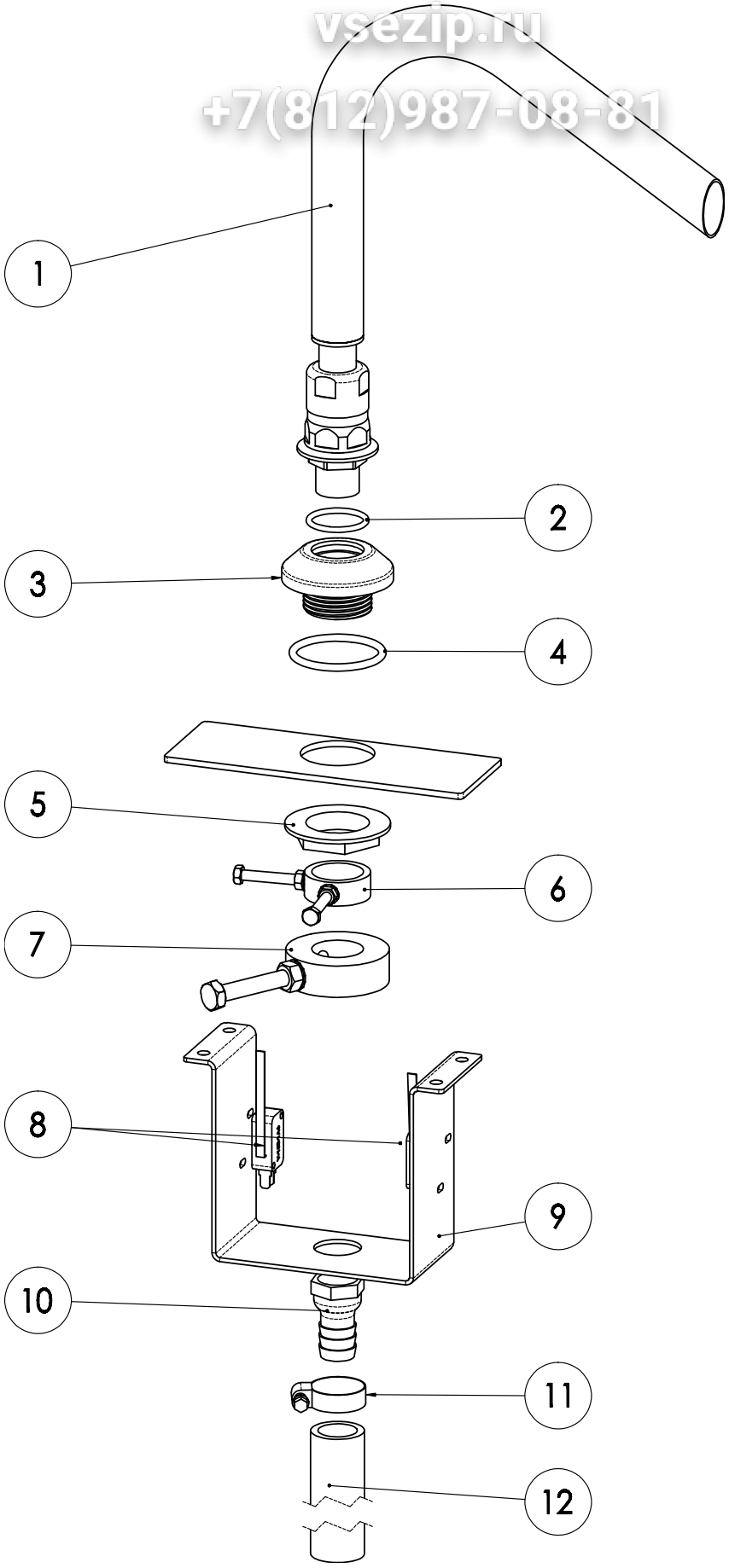

Зип Общепит
vsezip.ru
+7(812)987-08-81

Pos.	Model	UM	Qty	C	Model	Description	Price Eur
01		PZ	1,00		SC1170-00	WATER-INLET COCK CBT/PR	
02		PZ	1,00		10500104	O-RING DI.25,07X2,62 RIF.2100 VITON	
03		PZ	1,00		SC1160-00	TAP-PIPE SUPPORT BUSH	
04		PZ	1,00		10500118	O-RING DI.39,69X3,53 RIF.144 NBR	
05		PZ	1,00		10400064	BRASS FERRUCLE 1"	
06		PZ	1,00		SC1166-00	BUSH MICRO SWITCH LEVER COCK	
07		PZ	1,00		SC1164-00	LOCK TAP BUSH	
08		PZ	1,15	C	40100008	ROUND LIMIT SWITCH OMRON V-153-1A6	
09		PZ	1,00		SC1162-00	SUPPORTO GRUPPO RUBINETTO ACQUA	
10		PZ	1,00		10400135	RUBBER-HOLDER F1/2"X18 BRASS	
11		PZ	1,00		10300022	HOSE CLAMP D.20-32 INOX	
12		MT	1,15		10600256	RUBBER HOSE FOR FOOD D.19-26	

Сип Общепит
vsezip.ru
+7(812)987-08-81

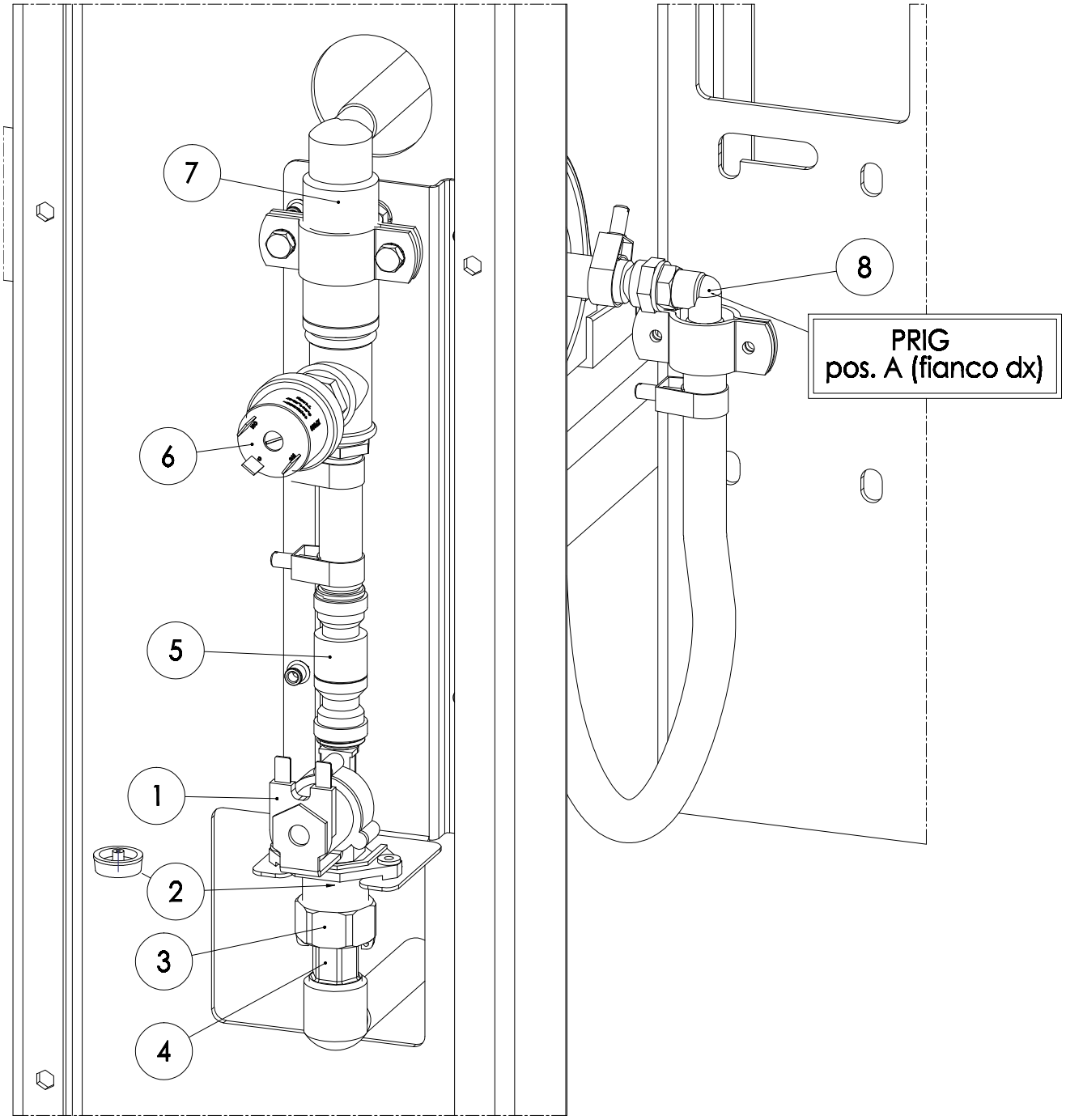

Сип Общепит
vsezip.ru
+7(812)987 08 81

Pos.	Model	UM	Qty	C	Model	Description	Price Eur
01		PZ	1,00	C	30100070	SOLENOID VALVE WATER 1 WAY 230/50HZ	
02		PZ	1,00		30100071	FLOW REGULATOR SOLENOID 1 WAY	
03		PZ	1,00		10400182	NUT 3/4" FOR MAG.VENTIL.1/2"	
04		PZ	1,00		10400184	FITTING 1/2" FOR SOLENOID	
05		PZ	1,00		10400242	NO-RETURN VALVE FOR PIPE D.10	
06		PZ	1,00	C	30300051	PRESSURE SWITCH 0,6 BAR N.C. 1/8" F	
07		PZ	1,00		30300036	MAGNETIC AGAINST-CALCAREUS DEVICE	
08		PZ	1,00		30200060	90° REVOLVING PIPE 3/8" PIPE D10	

ЭнергоОбщепит
vsezip.ru
+7(812)987-08-81

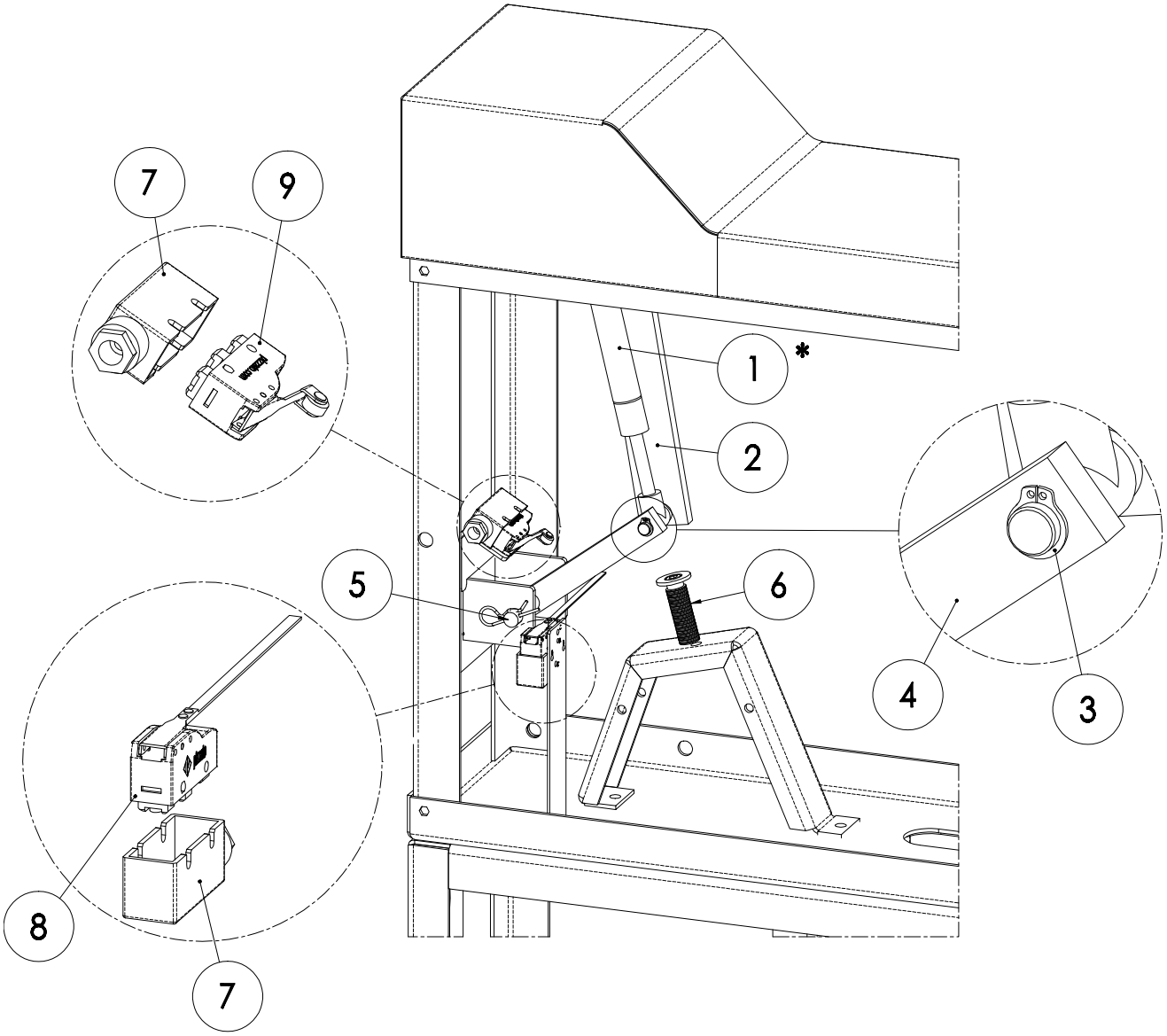

*** ATTENZIONE : POS.1 fornire il nr.di matricola della macchina**

*** ATTENTION : POS.1 provide the serial number of the machine**

Эмп Общепит
vsezip.ru
+7(812)987-08-81

Pos.	Model	UM	Qty	C	Model	Description	Price Eur
01	*	PZ	1,00		20300...	GAS SPRING 2210.300. RF2-BS2	
02		PZ	1,00		SC1122-00	TILTING ROD LID	
02	MOD. ..A	PZ	1,00		SD0838-00	*TILTING ROD LID DBR..A	
03		PZ	1,00		10500000	INOX RING SHAFT D.10 UNI7435	
04		PZ	1,00		SC1130-00	LEVER GUIDE GAS SPRING	
05		PZ	1,00		SC1132-00	TONDO D.12 X LEVA GUIDA MOLLA GAS	
06		PZ	1,00		20300300	BELLEVILLE WASHER SP.0,9 D.16-8,2	
07		PZ	1,00		10600150	BOOTLEG PG9 LIMIT-SWITCH	
08		PZ	1,00	C	40100009	ROUND LIMIT SWITCH MS35	
09	PRI.M	PZ	1,00	C	40100010	ROUND LIMIT SWITCH MS42	

Завод Общепит
vsezip.ru
+7(812)987-08-81

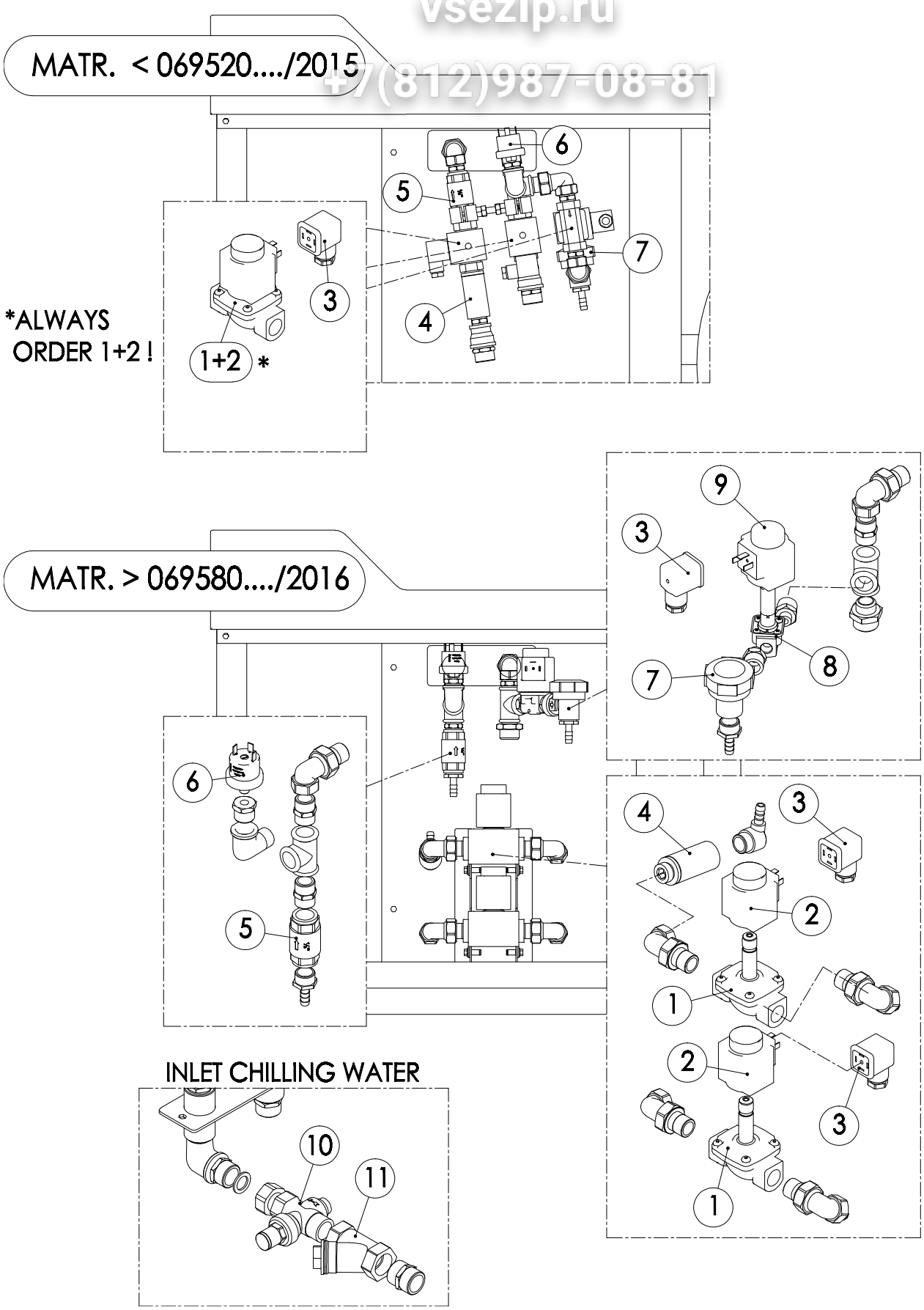

Завп Общепит
vsezip.ru
+7(812)987-08-81

Pos.	Model	UM	Qty	C	Model	Description	Price Eur
01		PZ	1,00		30100140	ELETTROVALVOLA VAPORE 1/2" N.C.8BAR	
02		PZ	1,00		30100162	BOBINA COL.NERO ELETTROV.DANFOSS	
03		PZ	1,00		40100072	CONNETT.GRIGIO ELETTROV.IP65 PG11	
04		PZ	1,00		30300036	MAGNETIC AGAINST-CALCAREUS DEVICE	
05		PZ	1,00		30200096	NO-RETURN VALVE 1/2" F/F	
06		PZ	1,00	C	30300051	PRESSURE SWITCH 0,6 BAR N.C. 1/8" F	
07		PZ	1,00		30300040	STEAM TRAP 1/2" "E" BPT13AX	
08		PZ	1,00		30100150	ELETTROVALVOLA H20/VAPORE 1/4" NA	
09		PZ	1,00		30100160	BOBINA COL.AZZURRO ELETTROV.DANFOSS	
10		PZ	1,00		30300039	RIDUTTORE PRESS.3/4" SB C/RACC H20	
11		PZ	1,00		10400005	NIPPLE M-M 3/4"	

Завод Общепит
vsezip.ru
+7(812)987-08-81

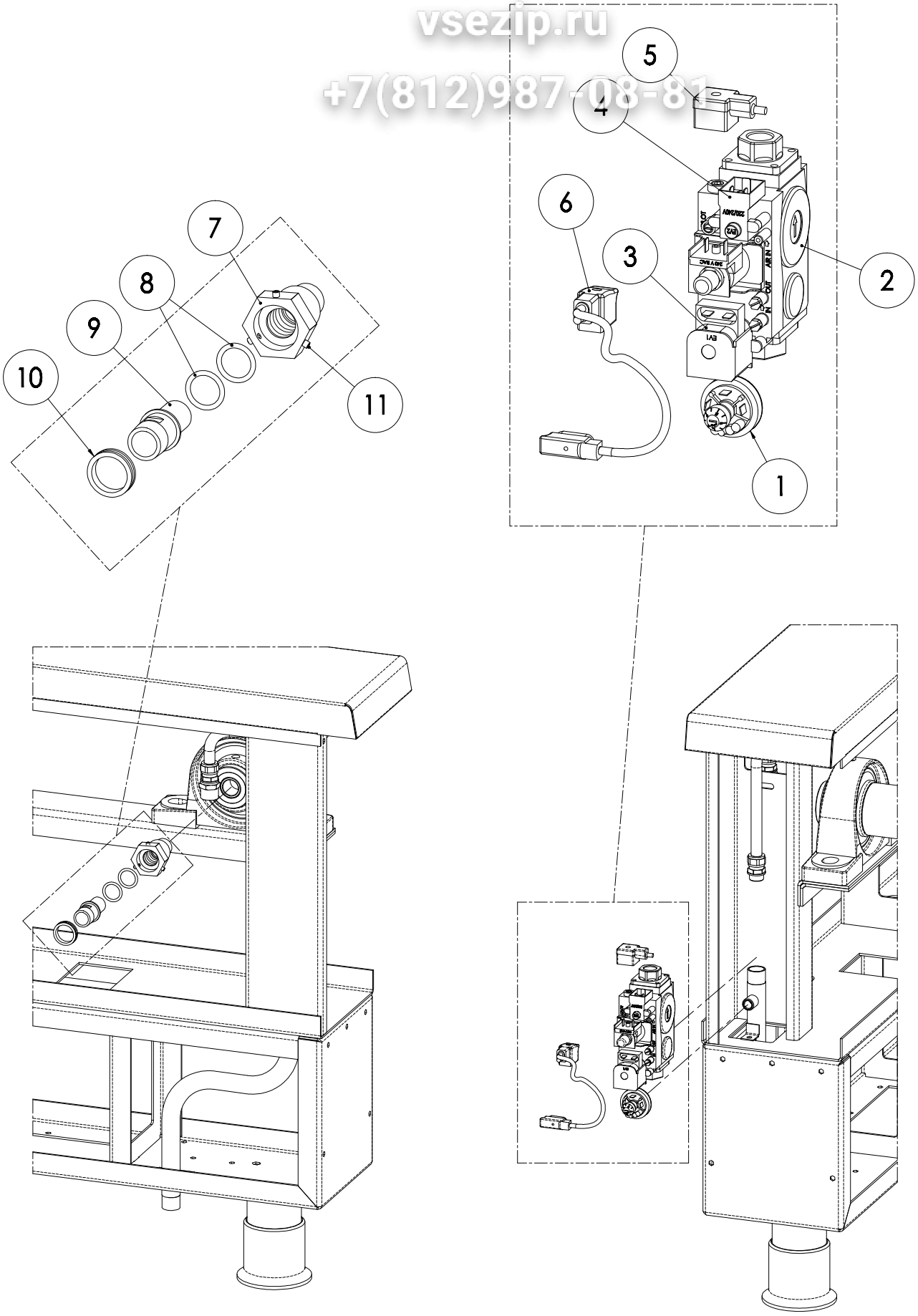

Завод Общепит
vsezip.ru
+7(812)987-08-81

Pos.	Model	UM	Qty	C	Model	Description	Price Eur
01		PZ	1,00		30300053	PRESSURE GAS SWITCH 10/50 MBAR	
02		PZ	1,00		30100002	SOLENOID VALVE SH 826 NOVA	
03		PZ	1,00	C	40100015	COIL OF SOLENOID 50HZ EV1 822/826	
03		PZ	1,00		40100170	COIL OF SOLENOID 60HZ EV1 822/826	
04		PZ	1,00	C	40100017	COIL OF SOLENOID 50HZ EV2 822/826	
04		PZ	1,00		40100172	COIL OF SOLENOID 60HZ EV2 822/826	
05		PZ	1,00	C	40100013	CON.SCREW+GASKET+RECT.826	
06		PZ	1,00		40100016	DOUBLE CONNECTOR + SCREWS 826	
07		PZ	1,00		SC1200-00	EXTERNAL EL. ARTICULATION GAS	
08		PZ	1,00		10500113	O-RING DI.23,4X3,53 RIF.131 XGAS	
09		PZ	1,00		SC1202-00	INTERNAL EL. ARTICULATION GAS	
10		PZ	1,00		SC1204-00	ARTICULATION GAS BECKET	
11		PZ	1,00		10100490	GRUB SCREW INOX M5X10 UNI5927	

Зип Общепит
vsezip.ru
+7(812)987-08-81

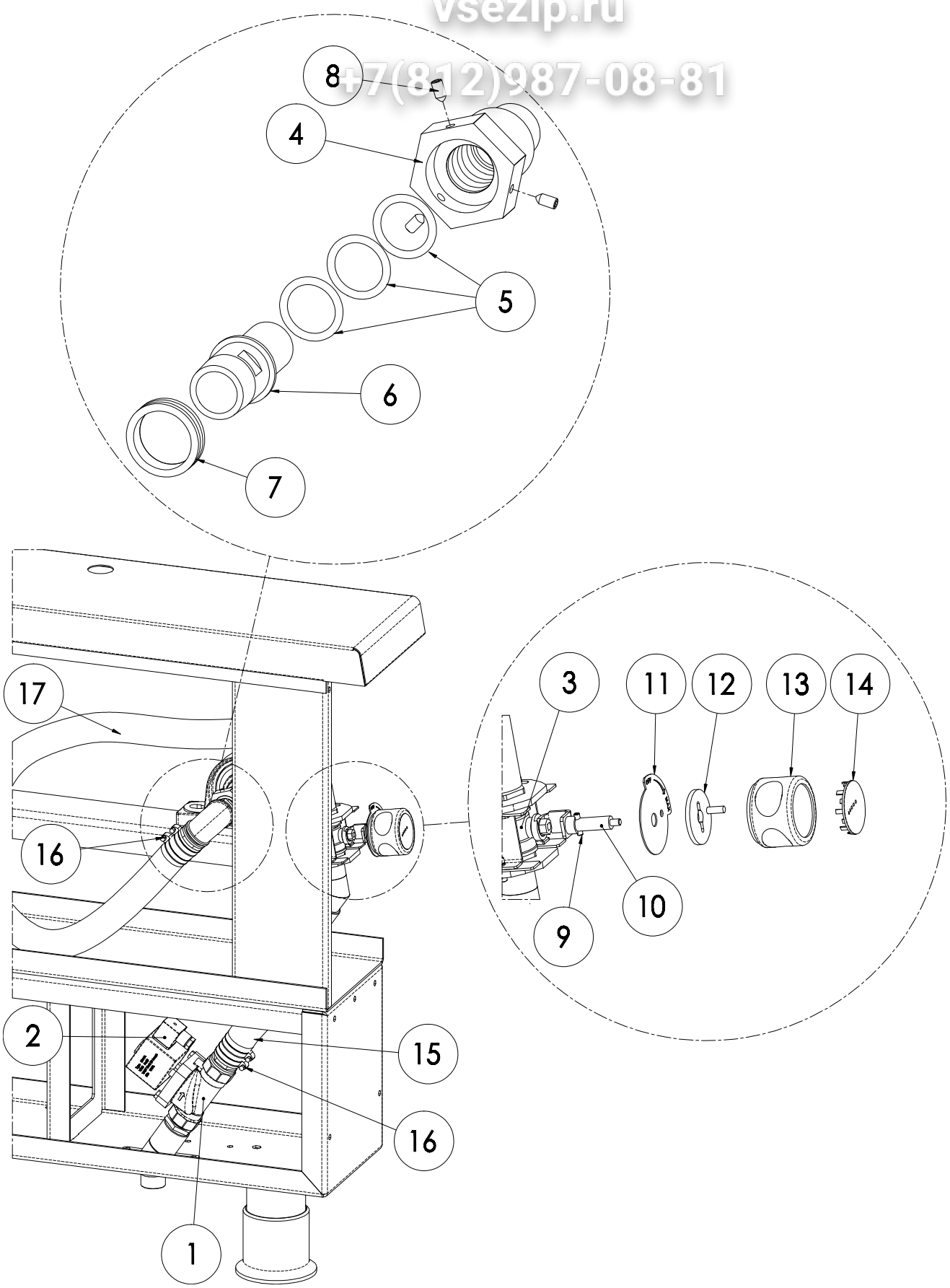

Зип Общепит
vsezip.ru
+7(812)987-08-85

Pos.	Model	UM	Qty	C	Model	Description	Price Eur
01	070-130	PZ	1,00		30100062	STEAM SOLENOID VALVE 3/4" N.C.	
01	180-500	PZ	0,50		30100066	STEAM SOLENOID VALVE 1" N.C.	
02		PZ	1,00		40100018	CONNECTOR FOR STEAM SOLENOID VALVE	
03	070-130	PZ	1,00	C	30200104	BALL VALVE FOR STEAM 3/4"M/F	
03	180-500	PZ	1,00	C	30200106	BALL VALVE FOR STEAM 1" F/F	
04		PZ	1,00		SC1200-00	EXTERNAL EL. ARTICULATION GAS	
05		PZ	1,00		10500114	O-RING DI.23,4X3,53 R.131 E540-80	
06		PZ	1,00		SC1202-00	INTERNAL EL. ARTICULATION GAS	
07		PZ	1,00		SC1204-00	ARTICULATION GAS BECKET	
08		PZ	1,00		10100490	GRUB SCREW INOX M5X10 UNI5927	
09		PZ	1,00		10300028	PIN INOX D.5X20 UNI6873	
10		PZ	1,00		SMC0094-00	DRIVE SHAFT FOR STEAM KNOB 1"	
11		PZ	1,00		SMC0097-00	INDEX FOR STEAM KNOB CPM..	
12		PZ	1,00		SMC0096-00	BEAT STEAM KNOB CPM..	
13		PZ	1,00	C	20200044	KNOB D.63 FOR CPM.	
14		PZ	1,00	C	20200046	GREY COVERING FOR KNOB D.65	
15	070-130	MT	0,50		10600033	RUBBER HOSE FOR FOOD D.19-31 STEAM	
15	180-500	MT	0,50		10600029	RUBBER HOSE FOR FOOD D.30-45 STEAM	
16	070-130	PZ	1,00		10300022	HOSE CLAMP D.20-32 INOX	
16	180-500	PZ	0,50		10300050	HOSE CLAMP D.32-50 INOX	
17	070-130	MT	1,10		10600033	RUBBER HOSE FOR FOOD D.19-31 STEAM	
17	180-500	MT	1,30		10600029	RUBBER HOSE FOR FOOD D.30-45 STEAM	

Зип Общепит
vsezip.ru
+7(812)987-08-81

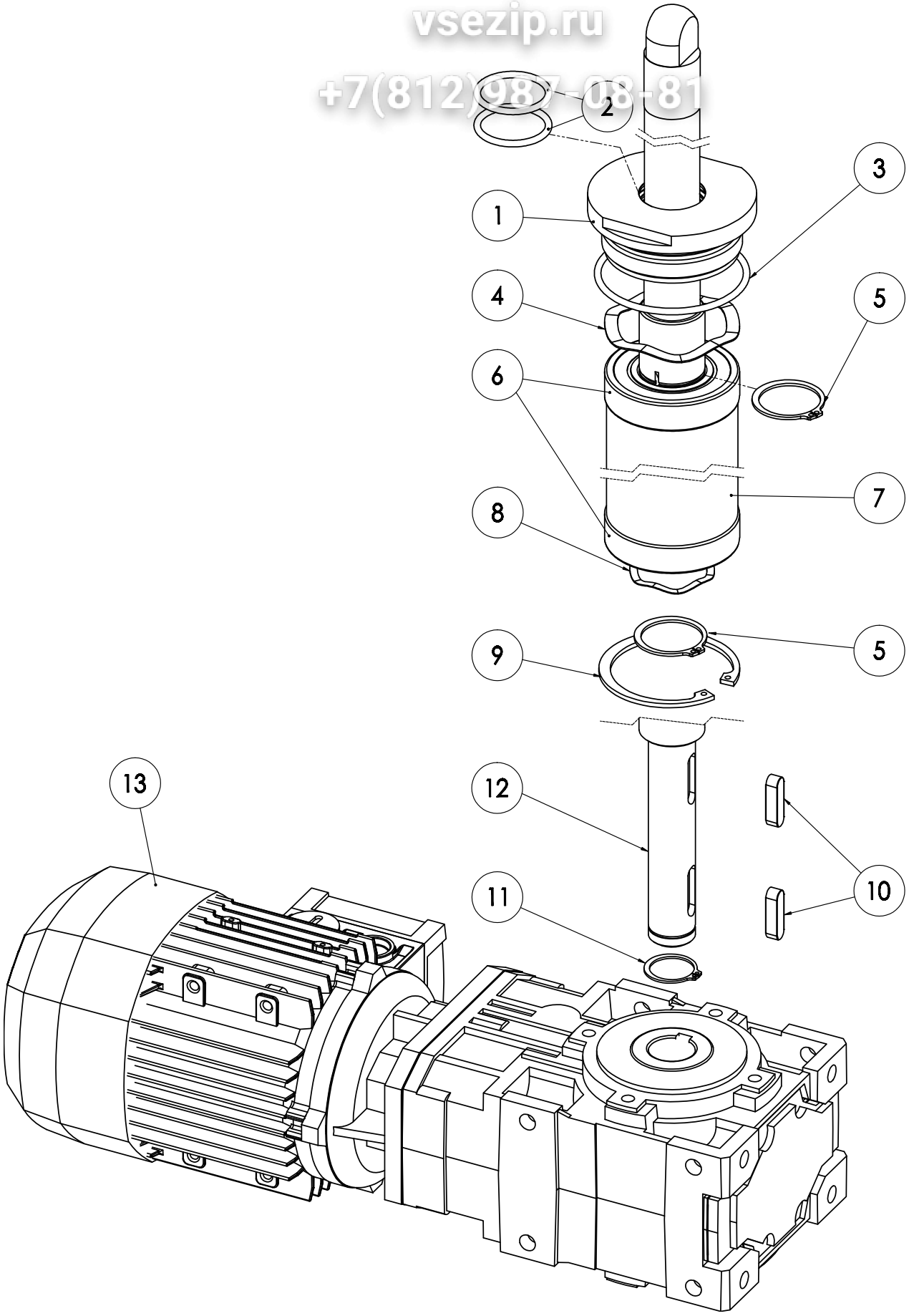

Зип Общепит
vsezip.ru
+7(812)987-08-81

Pos.	Model	UM	Qty	C	Model	Description	Price Eur
01		PZ	1,00		SP4002-00	SUPPORT PLUG TRANSMIS.PRI./M T.N.	
02		PZ	1,00	C	10500080	O-RING 34,52X3,53 R.2-220 E 540-80	
03		PZ	1,00	C	10500082	O-RING 75,79X3,53 R.2-234 SILICONE	
04		PZ	1,00		20400040	WAV.RING LMKAS 72B D.71,8-58	
05		PZ	1,00		10500032	INOX RING SHAFT D.35 UNI7435	
06		PZ	1,00		20400035	RADIAL BEARING D.35 6205-2RS INOX	
07		PZ	1,00		SP4004-00	SPACER TUBE BEARINGS PR.I/M T.N.	
08		PZ	1,00		20400042	WAV.RING LMKAS 47A D.45-37	
09		PZ	1,00		10500056	RING FOR HOLES D.72 UNI7437	
10	PR.070-180	PZ	1,00		10300073	PARALLEL KEY 8X7X30 A2 UNI6604/A	
10	PR.250-500	PZ	1,00		10300074	PARALLEL KEY 8X7X36 A2 UNI6604/A	
11	PR.070-180	PZ	1,00		10500015	INOX RING SHAFT D.25 UNI7435	
11	PR.250-500	PZ	1,00		10500025	INOX RING SHAFT D.30 UNI7435	
12	PR.070-180	PZ	1,00		SP4010-00	DRIVE SHAFT PRI.070-180 TN	
12	PR.250-500	PZ	1,00		SP4012-00	DRIVE SHAFT PRI.250-320 TN	
13	PR.070	PZ	1,00		40300132	MOTOR RED.COMPACT 8,5KGM A102 PR070	
13	PR.105-180	PZ	1,00		40300142	MOTOR RED.12,6KGM A102 PR105/180	
13	PR.250-320	PZ	1,00		40300162	MOTOR RED.25,2KGM A202 PR250/320	
13	PRIE-IV500	PZ	1,00		40300172	MOTOR RED.30,8KGM MR ICI63 PR500	
13	PRIG500	PZ	1,00		40300176	MOTORID.COMP.31 KGM MRO23 PRIG500M	

Зип Общепит
vsezip.ru
+7(812)987-08-81

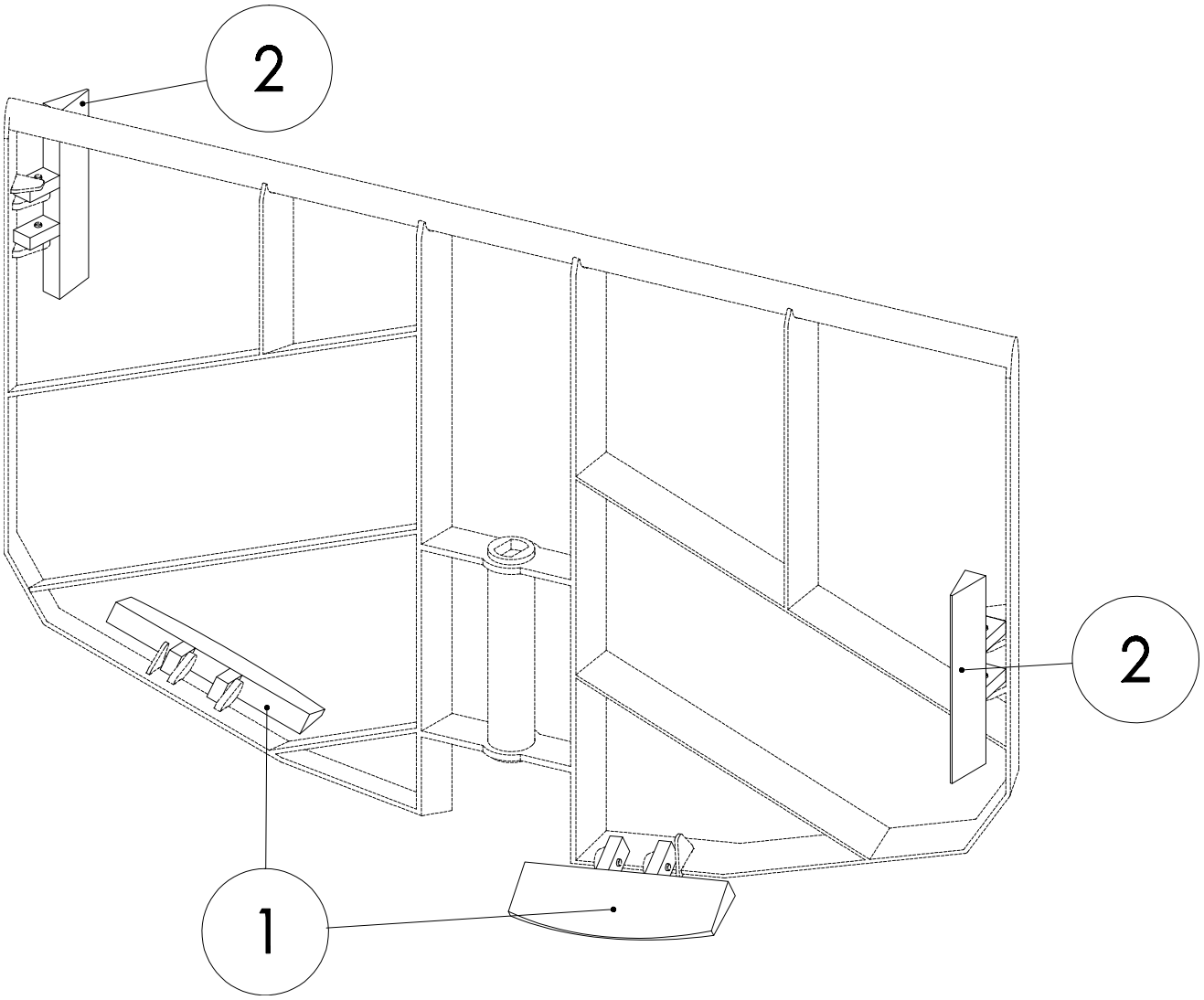

Зип Общепит
vsezip.ru
+7(812)987-08-80

Pos.	Model	UM	Qty	C	Model	Description	Price Eur
01	070÷130	PZ	1,00		SP4220-00	HORIZONTAL TEFLON SCRAPER PAN D.600	
01	180÷500	PZ	1,00		SP4222-00	HORIZ TEFLON SCRAPER PAN D.1 8/900 NEW	
02	070÷130	PZ	1,00		SP4230-00	VERTICAL TEFLON SCRAPER PAN H.145	
02	180÷500	PZ	1,00		SP4232-00	VERTICAL TEFLON SCRAPER PAN H.185	

Зип Общепит
vsezip.ru
+7(812)987-08-81

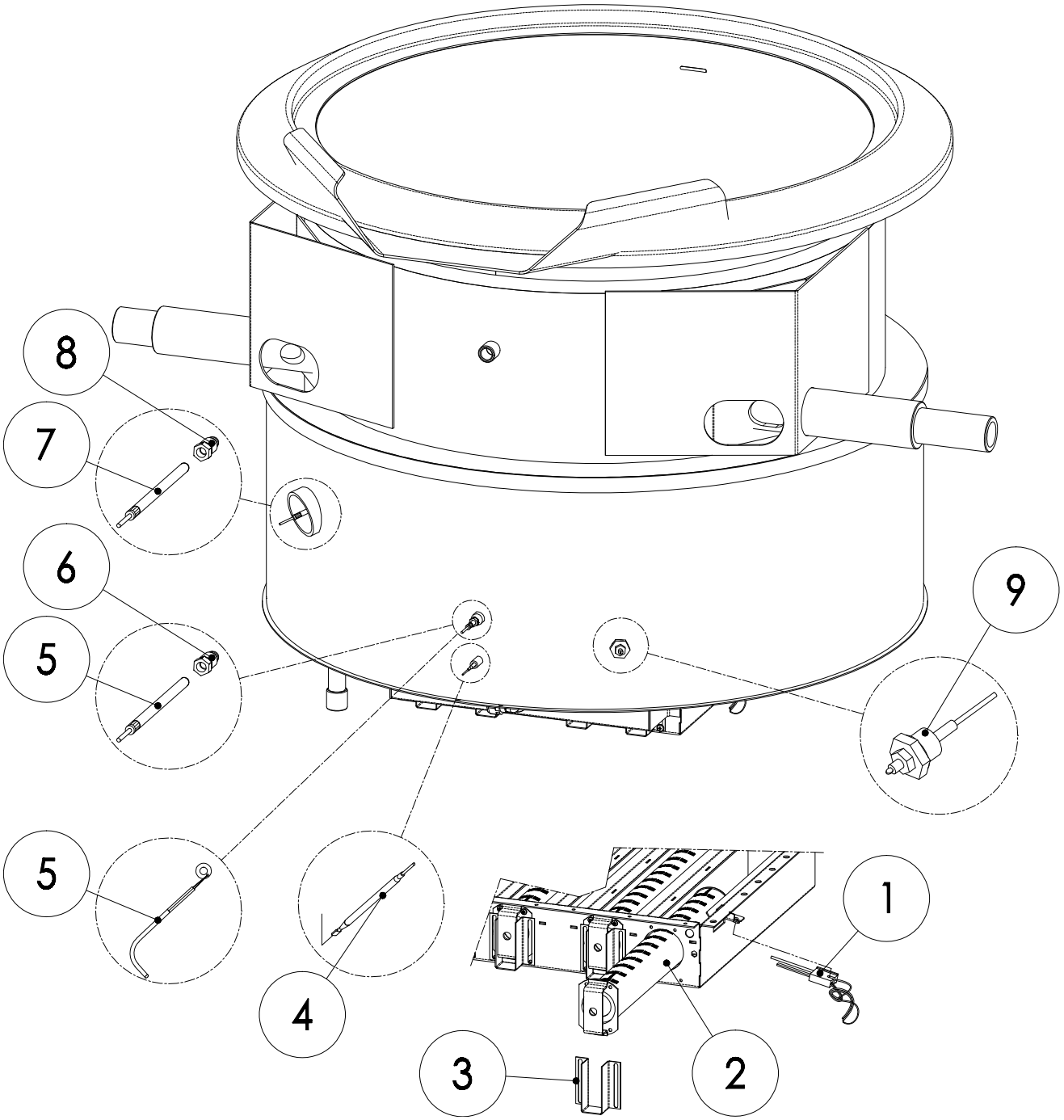

Зип Общепит
vsezip.ru
+7(812)987-08-81

Pos.	Model	UM	Qty	C	Model	Description	Price Eur
01		PZ	1,00	C	30100032/1	IGNITOR WR 768G213 (WIRED)	
02	070-180	PZ	1,00		30400030	BURNER D.51 L=402MM 11-13KW	
02	250-500	PZ	1,00		30400040	BURNER D.51 L=552MM 13,5-16KW	
03		PZ	1,00		SC1434-00	AIR REGUL.BURNER CBTG180/310-PR/PF	
04	PRDG	PZ	1,00	C	40100062	SAFETY THERMOSTAT 360°C 3F	
04	PRIG	PZ	1,00	C	40100041	SAFETY THERMOSTAT 180°C 3F	
05	PRDG	PZ	1,00	C	40800024	PROBE TCK OCCH.5 L=2,5MT PRDG/PMDE	
05	PRIG	PZ	1,00	C	40800044	PROBE TCK D.6X100 PRODUCT PROBE PR	
06	PRIG	PZ	1,00		30100088	BICONE + PILOT CONNECTION D.6MM	
07	PRIG	PZ	1,00	C	40800044	PROBE TCK D.6X100 PRODUCT PROBE PR	
08	PRIG	PZ	1,00		30100088	BICONE + PILOT CONNECTION D.6MM	
09	PRIG	PZ	1,00		40800040	LEVEL CONTROL ELECTRODE	

Зип Общепит
vsezip.ru
+7(812)987-08-81

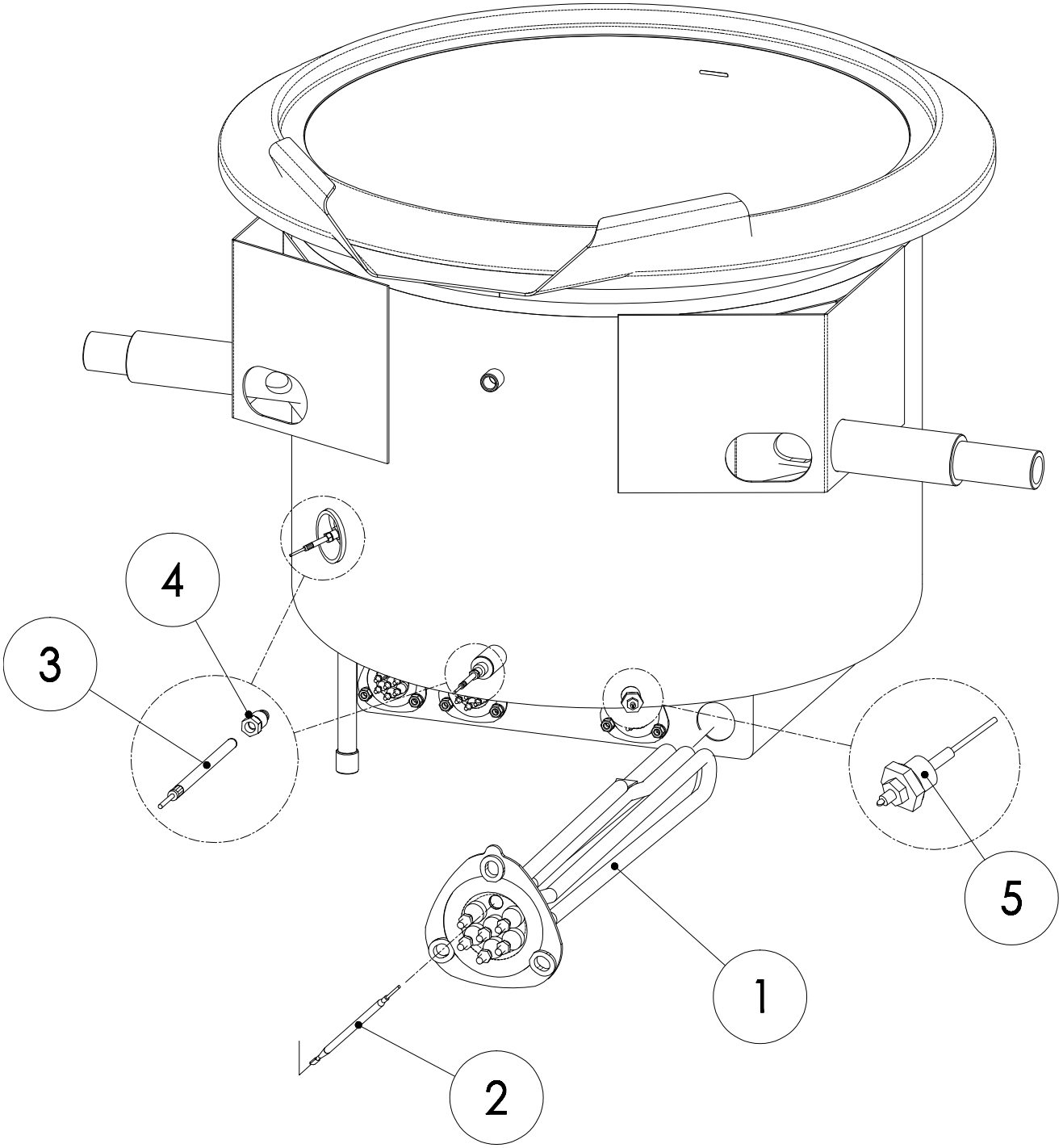

Зип Общепит

vsezip.ru
+7(812)987-08-81

Pos.	Model	UM	Qty	C	Model	Description	Price Eur
01	070-130-180*	PZ	1,00	C	40400040	HEATING ELEMENT FOR PAN 8KW 230V	
01	105-250÷500**	PZ	1,00	C	40400042	HEATING ELEMENT FOR PAN 9KW 230V	
01	*440÷480V	PZ	1,00	C	40400041	HEATING ELEMENT PAN 8KW 277V A=325	
01	**440V	PZ	1,00	C	40400043	RES.TRIF.PENTOLA 9KW 254V A=420	
01	**480V	PZ	1,00	C	40400047	RES.TRIF.PENTOLA 9KW 277V A=420	
02		PZ	1,00	C	40100041	SAFETY THERMOSTAT 180°C 3F	
03		PZ	1,00	C	40800044	PROBE TCK D.6X100 PRODUCT PROBE PR	
04		PZ	1,00		30100088	BICONE + PILOT CONNECTION D.6MM	
05		PZ	1,00		40800040	LEVEL CONTROL ELECTRODE	

Завп Общепит
vsezip.ru
+7(812)987-08-81

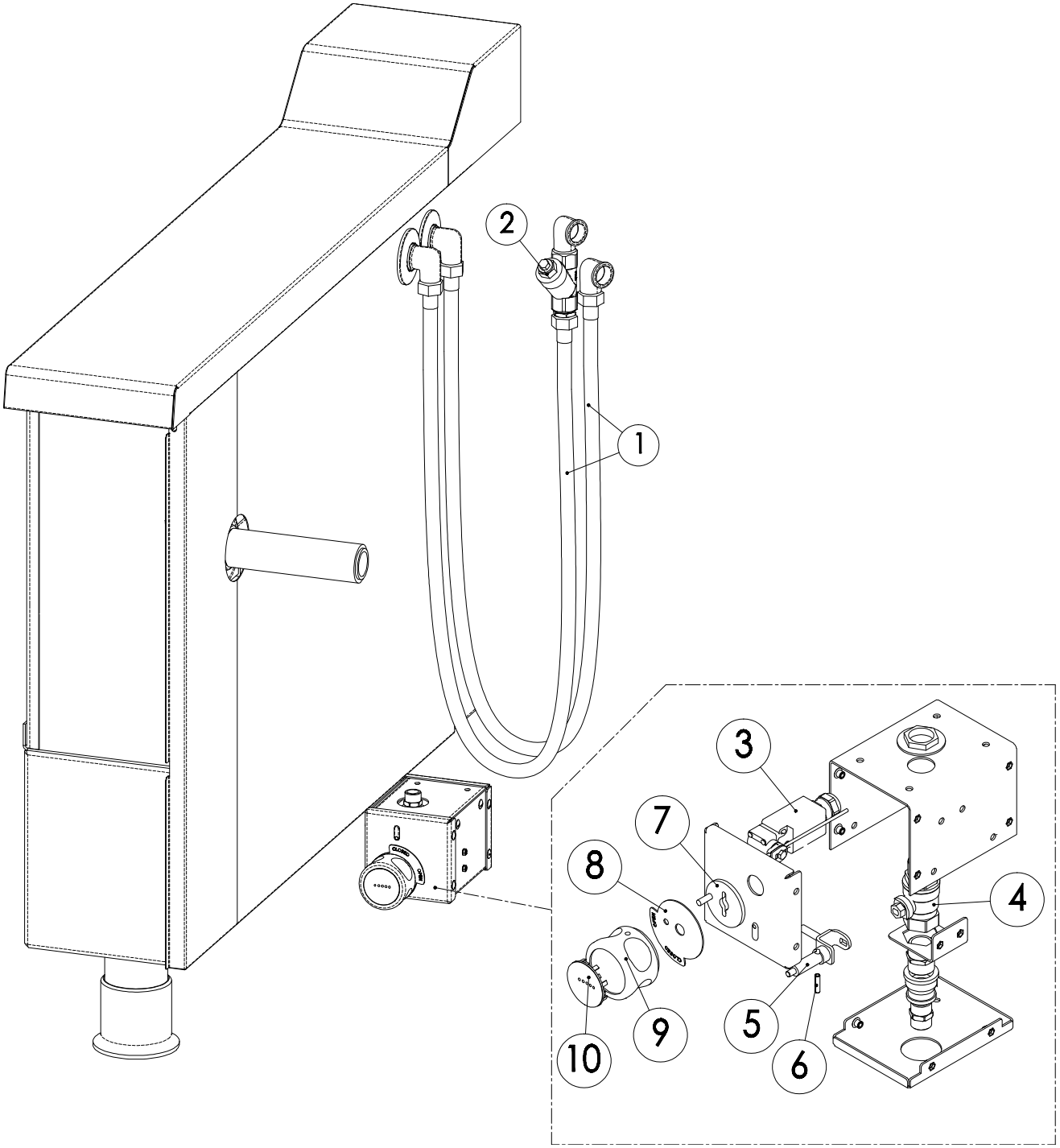

Зип Общепит
vsezip.ru
+7(812)987 08 81

Pos.	Model	UM	Qty	C	Model	Description	Price Eur
01		PZ	1,00		10400212	TUBO FLEX.INOX F-F 3/4"X1500	
02		PZ	1,00		30300045	FILTER H2O F-F 3/4" INOX	
03		PZ	1,00	C	40100001	ROUND LIMIT SWITCH FR550	
04		PZ	1,00	C	30200104	BALL VALVE FOR STEAM 3/4"M/F	
05		PZ	1,00		SP4182-00	ASS.ALBERINO X VALVOLA SFERA SCT2	
06		PZ	1,00		10300028	PIN INOX D.5X20 UNI6873	
07		PZ	1,00		SMC0096-00	BEAT STEAM KNOB CPM..	
08		PZ	1,00		SP4180-00	INDICE X MANOPOLA RUB.SCARICO SCT2	
09		PZ	1,00	C	20200044	KNOB D.63 FOR CPM.	
10		PZ	1,00	C	20200046	GREY COVERING FOR KNOB D.65	

Зип Общепит
vsezip.ru
+7(812)987-08-81

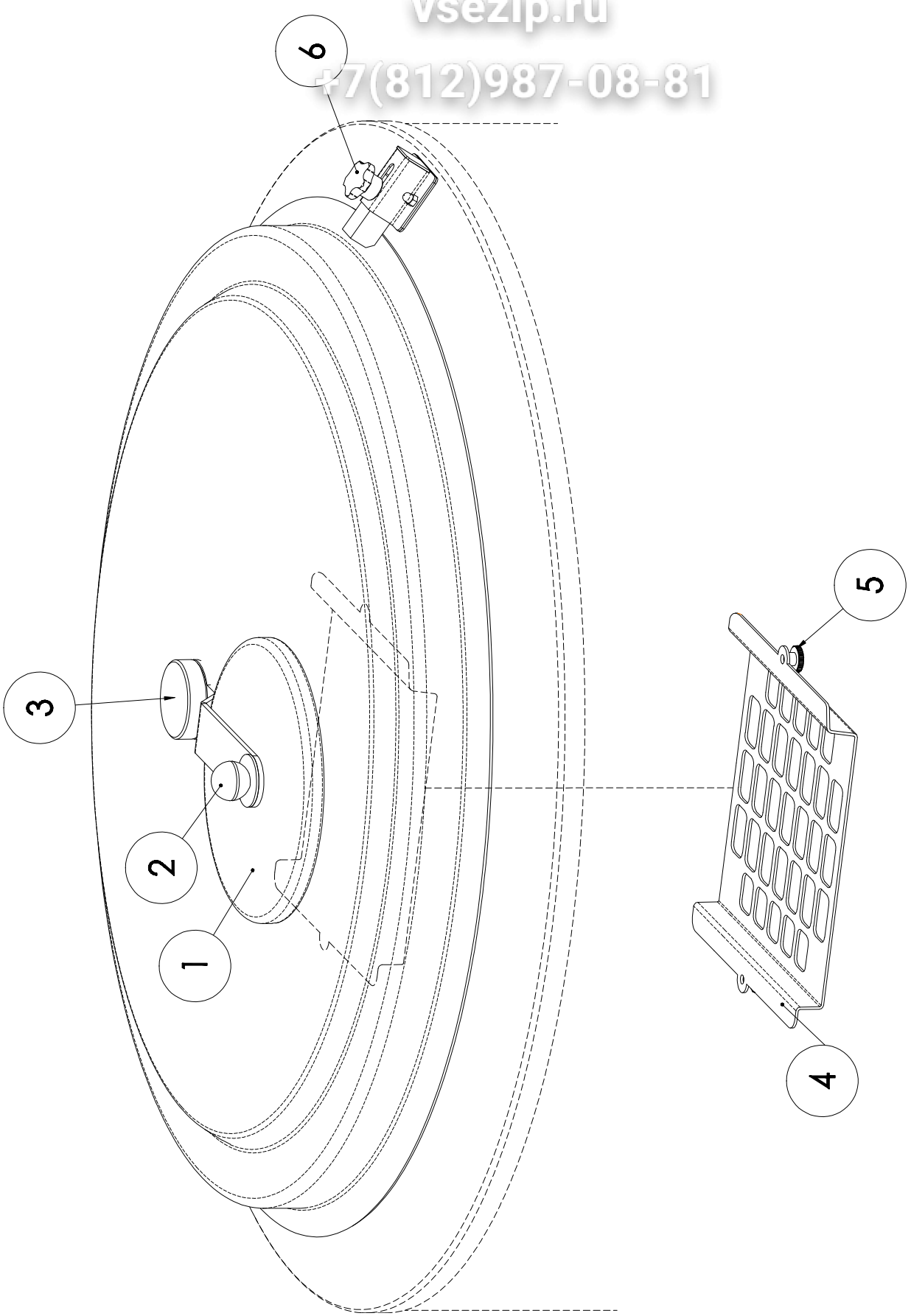

Зип Общепит
vsezip.ru
+7(812)987-08-81

Pos.	Model	UM	Qty	C	Model	Description	Price Eur
01		PZ	1,00		SP3970-00	TEFLON LID D.200	
02		PZ	1,00		20200039	HANDLE M6 D.32	
03		PZ	1,00		SC0290-00	KNURLED FERRUCLE D.60	
04		PZ	1,00		SP3684-00	GRID-CONTROL HOLE COVER D.205 PR.M	
05		PZ	1,00		20200036	KNURLED KNOB INOX M5X11,5	
06		PZ	1,00		20200024	KNOB 6 LOBE WITH PIN INOX 6X20	

Сип Общепит
vsezip.ru
+7(812)987-08-81

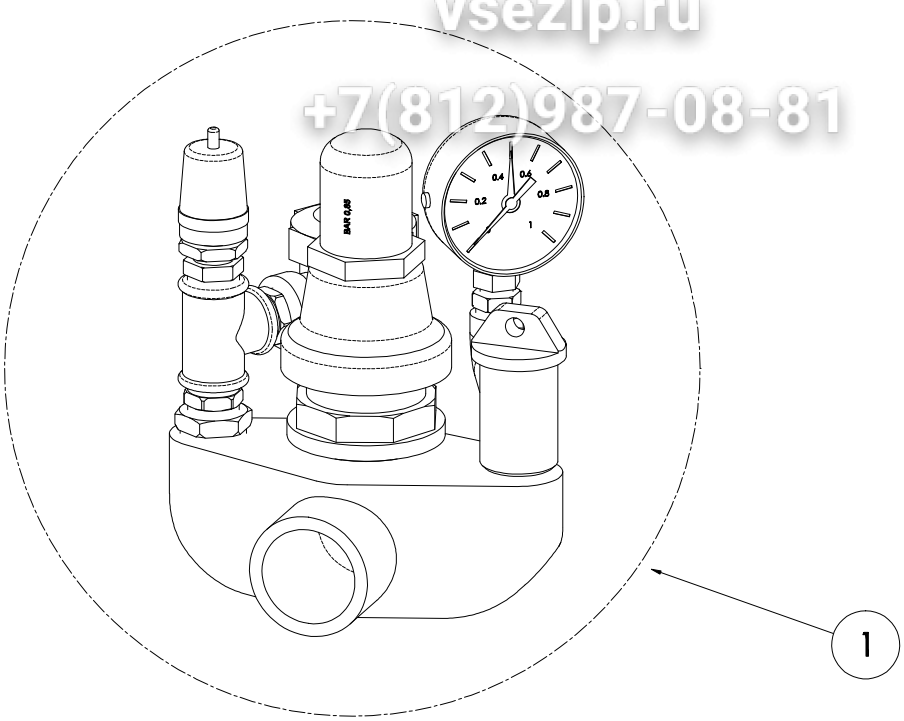

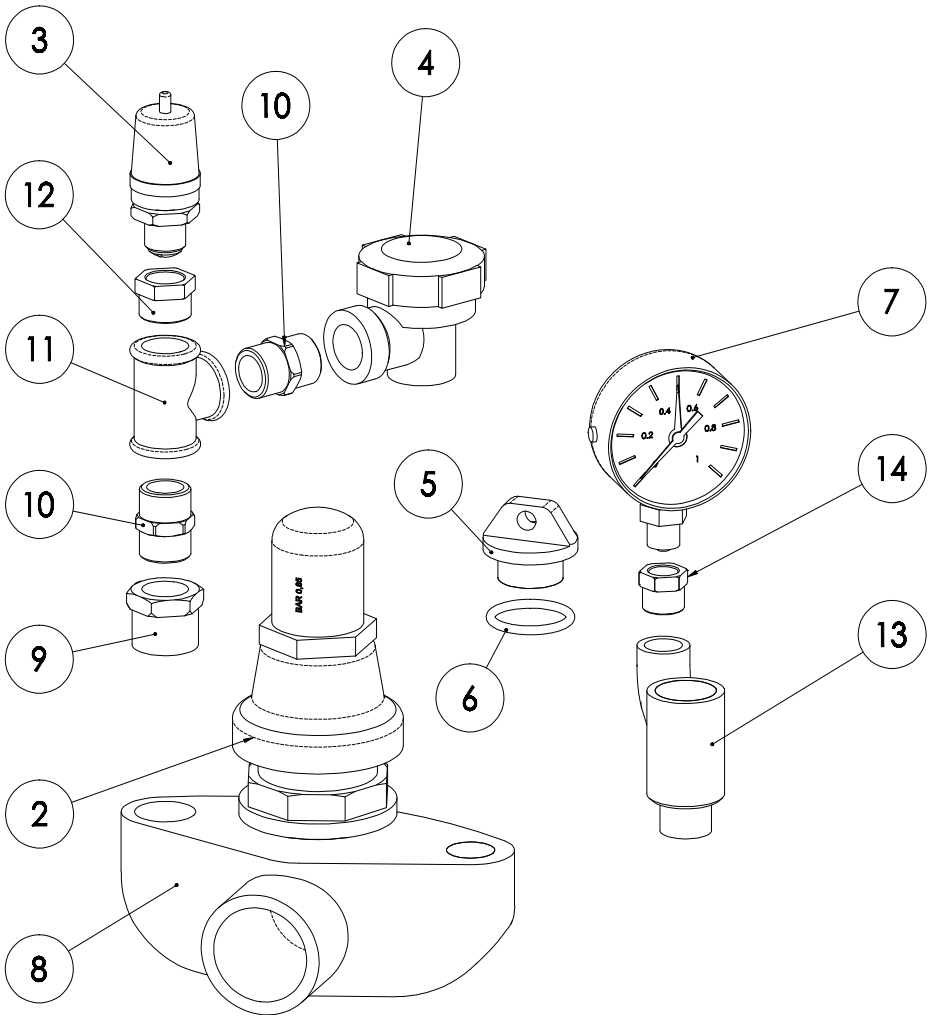

Сип Общепит
vsezip.ru
+7(812)987-08-81

Pos.	Model	UM	Qty	C	Model	Description	Price Eur
01		PZ	1,00		GRP14-0022	SAF.GR.SQ.1"1/4 0,85BAR IV+VACUUM	
02		PZ	1,00		30300022	SAFETY VALVE 0,85BAR 1 1/4"	
03		PZ	1,00		30300072	DEPRESSION VALVE 3/8"	
04		PZ	1,00		30300040	STEAM TRAP 1/2" "E" BPT13AX	
05		PZ	1,00		10400061	PLUG 3/4"	
06		PZ	1,00	C	10500110	O-RING DI.28,17X3,53 RIF.4112 NBR	
07		PZ	1,00		30300022	PRESSURE GAUGE 0/1 BAR D.60 1/4"	
08		PZ	1,00		30300069	TUBE-SOCKET / PRESS.GAUGE 90° 1"1/4	
09		PZ	1,00		10400053	REDUCTION 3/4"M-1/2"W (CHR.BRASS)	
10		PZ	1,00		10400004	NIPPLE M-M 1/2"	
11		PZ	1,00		10400118	JUNCTION T F/F/F 1/2"	
12		PZ	1,00		10400056	REDUCTION 1/2"M-3/8"W (CHR.BRASS)	
13		PZ	1,00		30300071	EXTENSION 1/2".3/4-3/8"	
14		PZ	1,00		10400052	REDUCTION 3/8"M-1/4"W (CHR.BRASS)	

Зип Общепит
vsezip.ru
+7(812)987-08-81

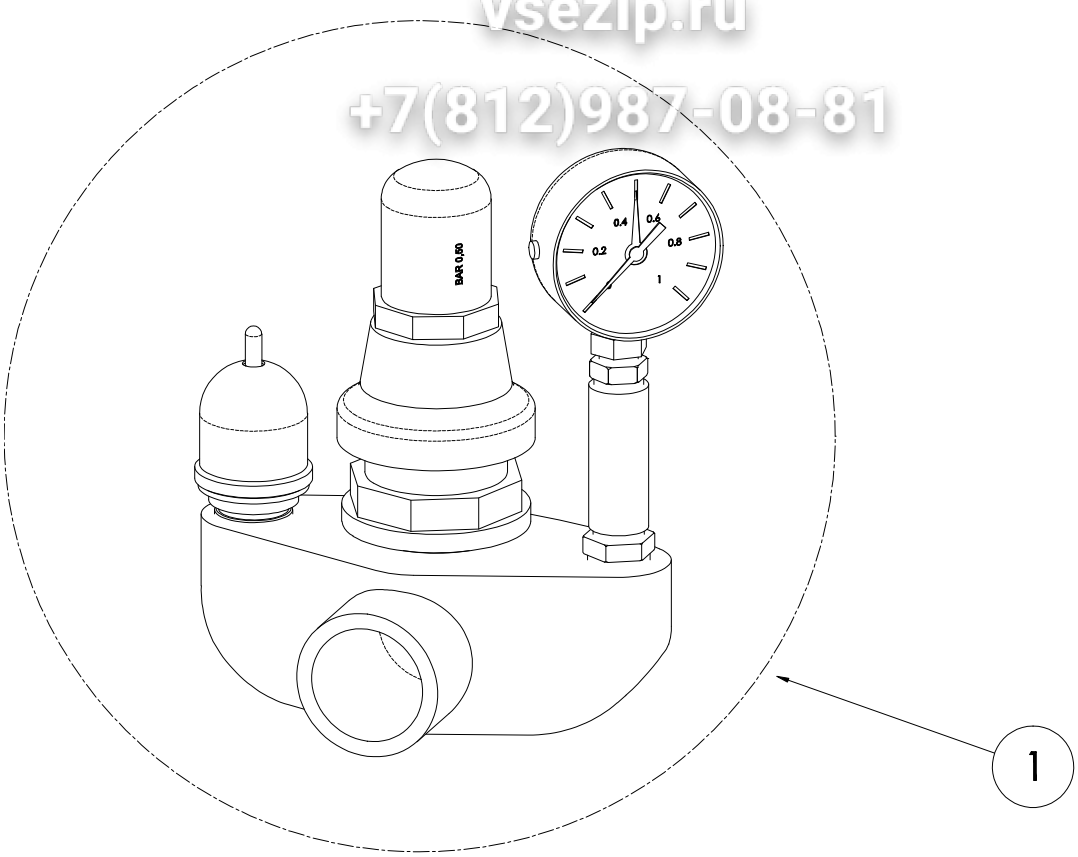

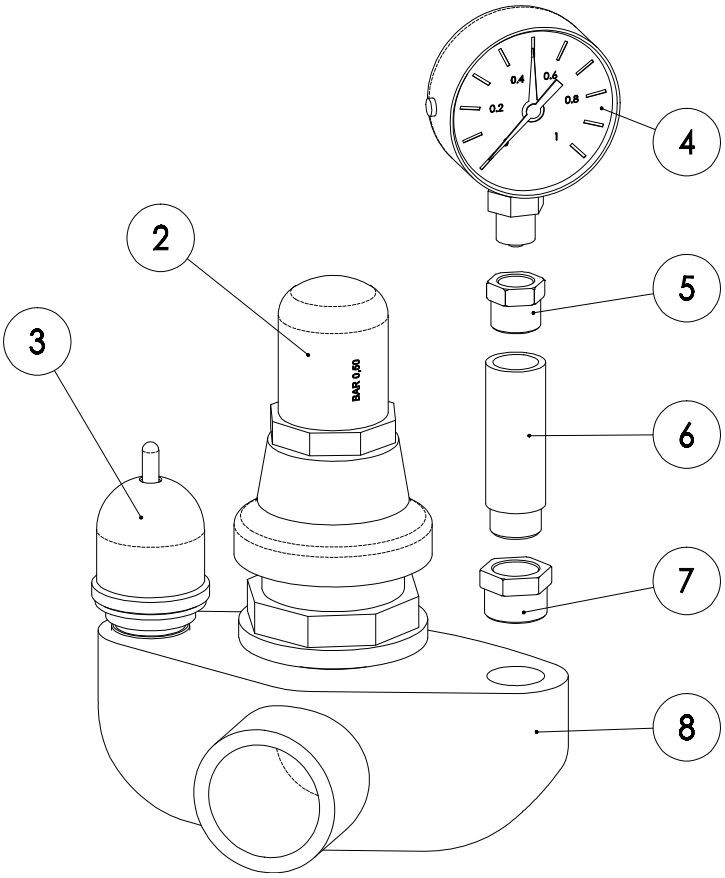

Зип Общепит
vsezip.ru
+7(812)987-08-81

Pos.	Model	UM	Qty	C	Model	Description	Price Eur
01		PZ	1,00		GRP14-0024	SAF.GR.SQ.1"1/4 0,5BAR IV+VACUUM	
02		PZ	1,00		30300009	SAFETY VALVE 0,60 BAR 1"1/4"	
03		PZ	1,00		30300060	DEPRESSION VALVE 3/4"	
04		PZ	1,00		30300022	PRESSURE GAUGE 0/1 BAR D.60 1/4"	
05		PZ	1,00		10400052	REDUCTION 3/8"M-1/4"W (CHR.BRASS)	
06		PZ	1,00		10400058	EXTENSION 3/8" M-F L=50MM	
07		PZ	1,00		10400056	REDUCTION 1/2"M-3/8"W (CHR.BRASS)	
08		PZ	1,00		30300069	TUBE-SOCKET / PRESS.GAUGE 90° 1"1/4	