Зип Общепит
vsezip.ru
+7(812)987-08-81

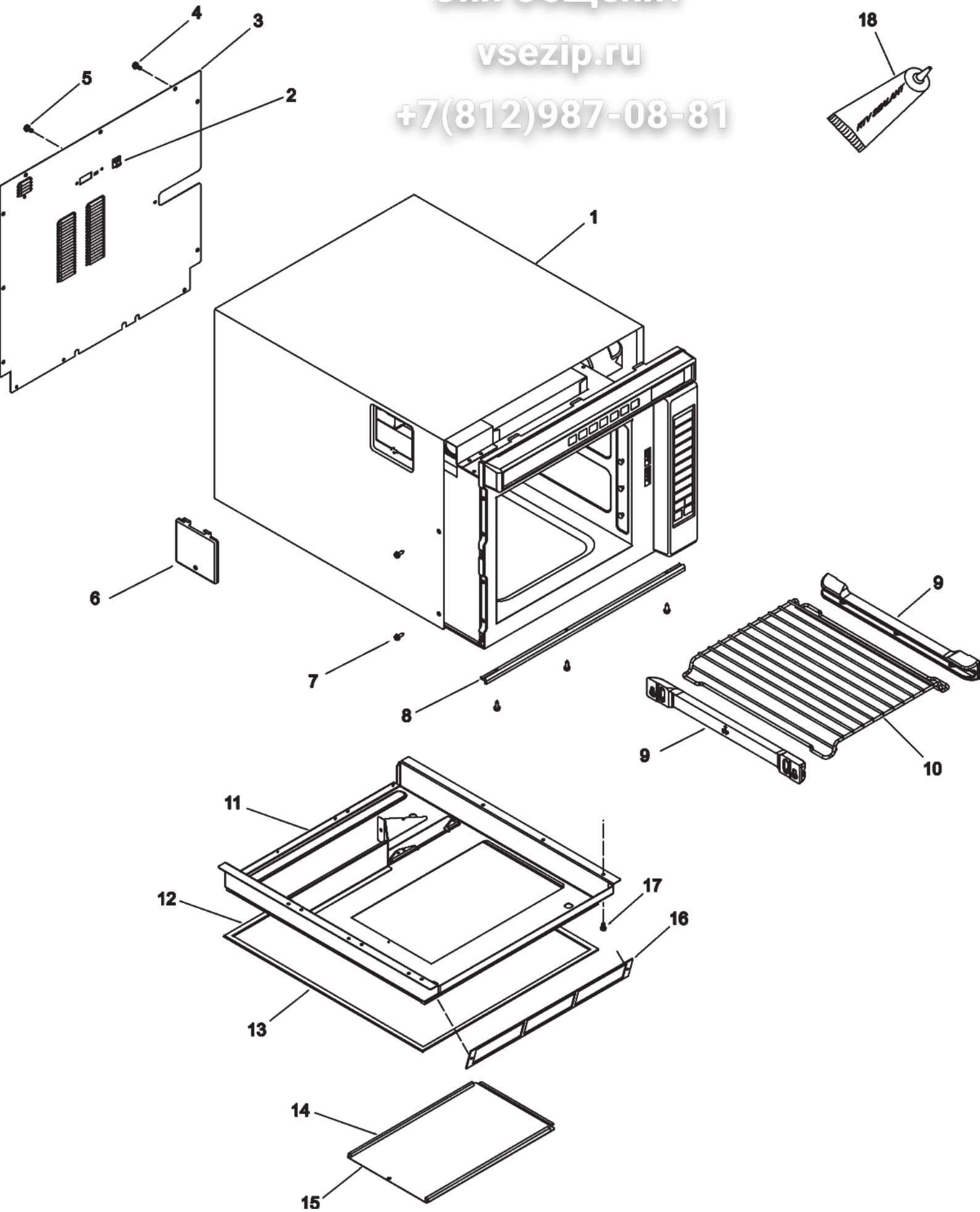

Зип Общепит
vsezip.ru
+7(812)987-08-81

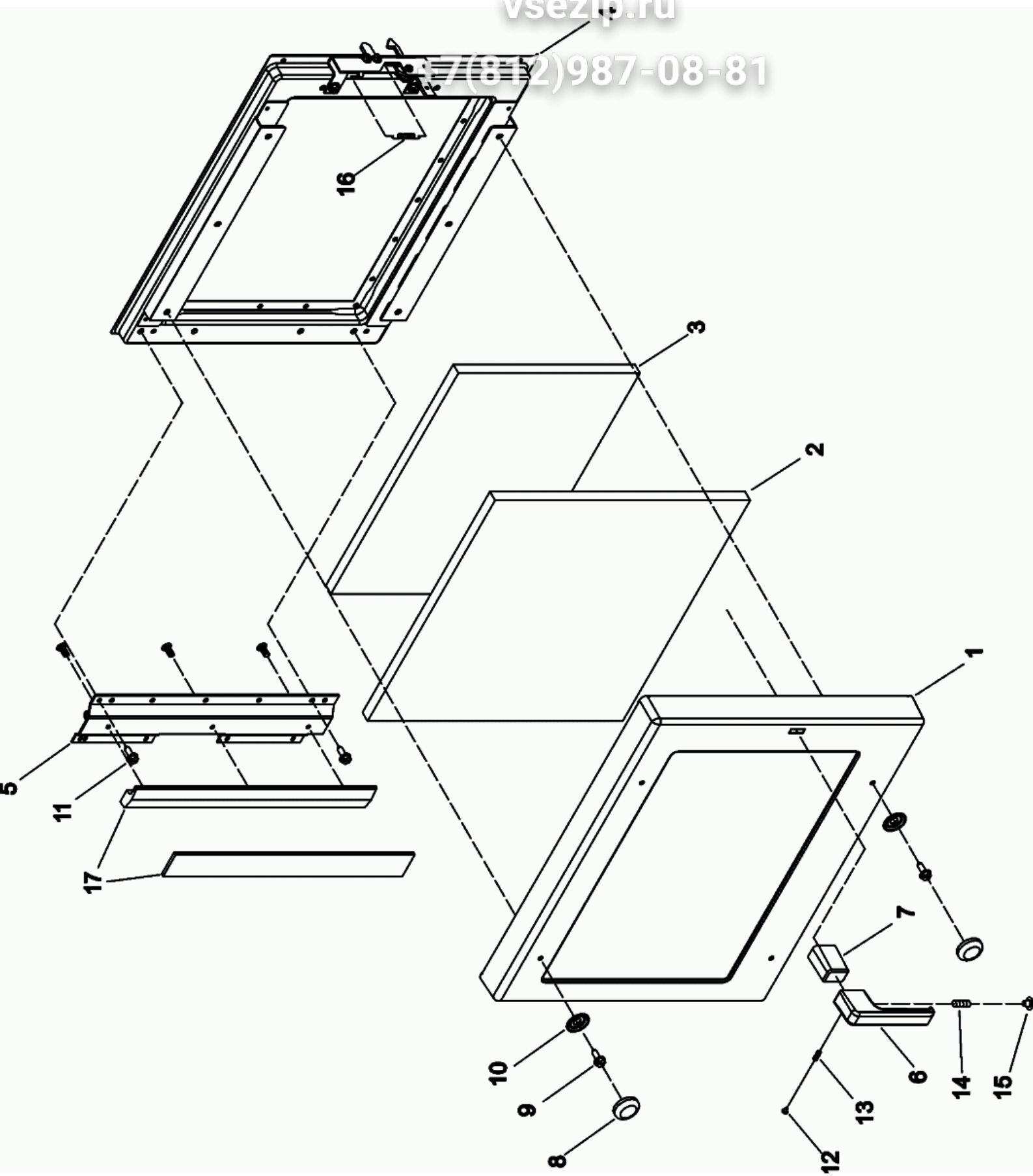

Зип Общепит
vsezip.ru
+7(812)987-08-81

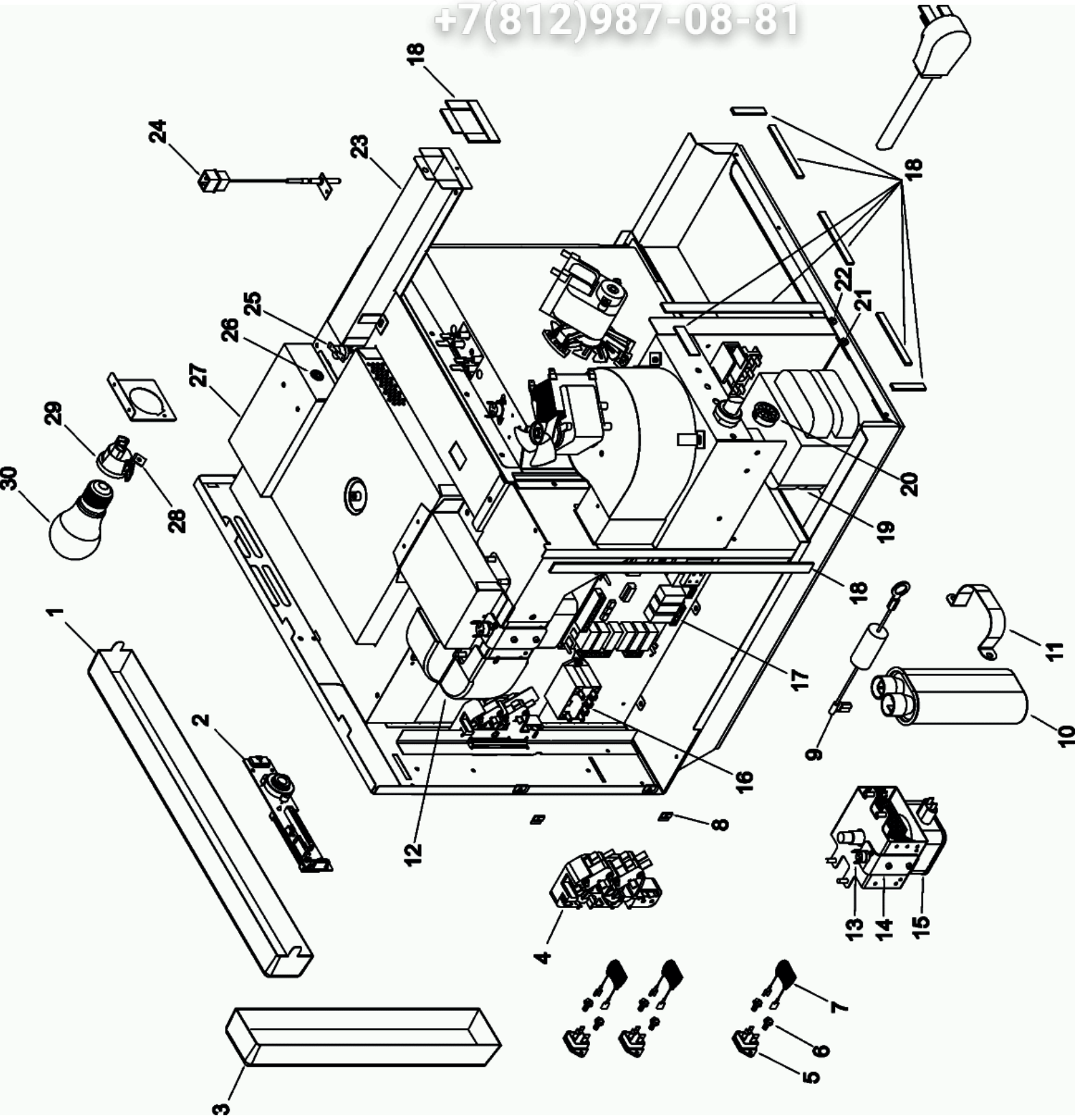

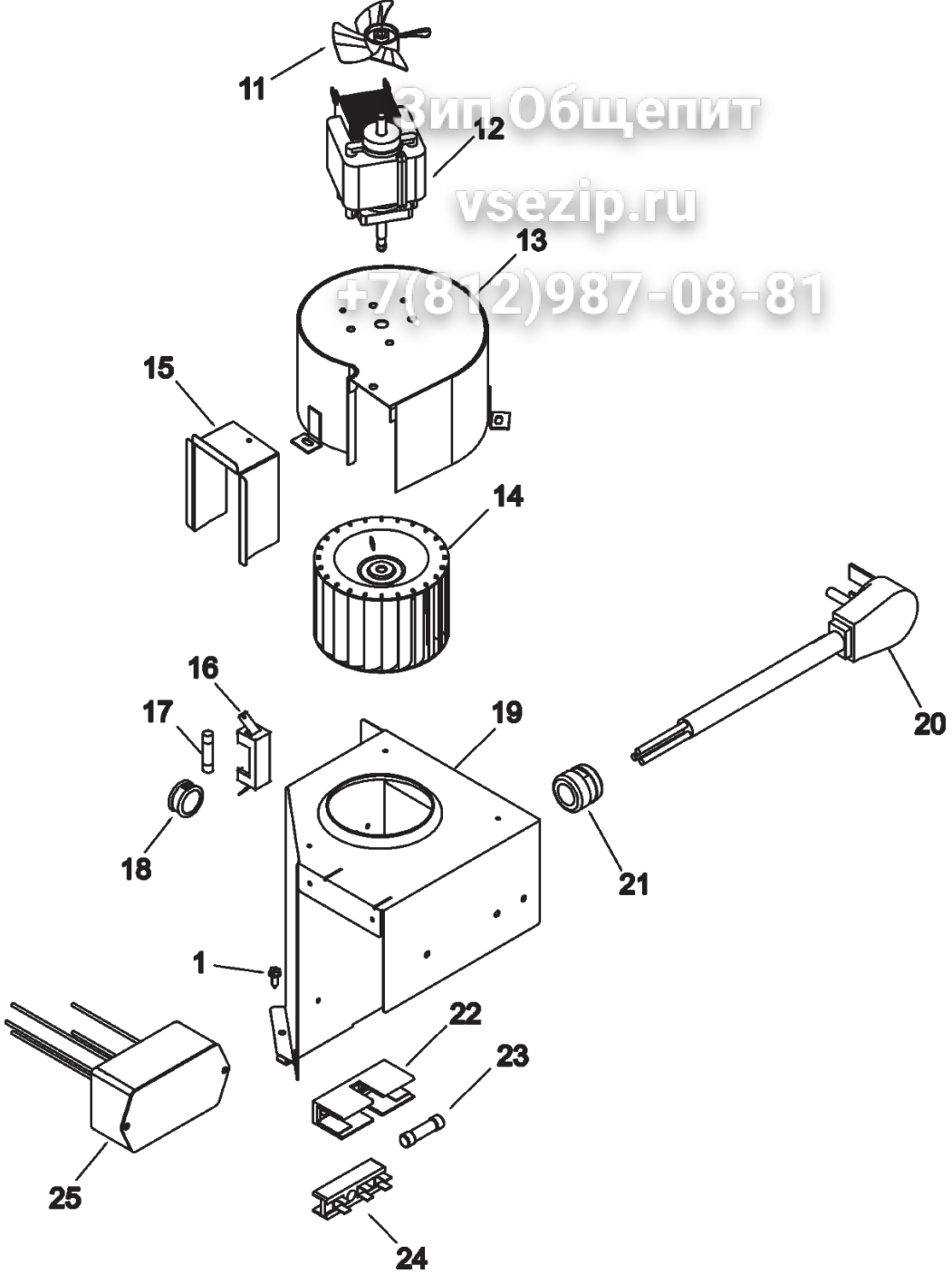

ЗипОбщепит
vsezip.ru
+7(812)987-08-81

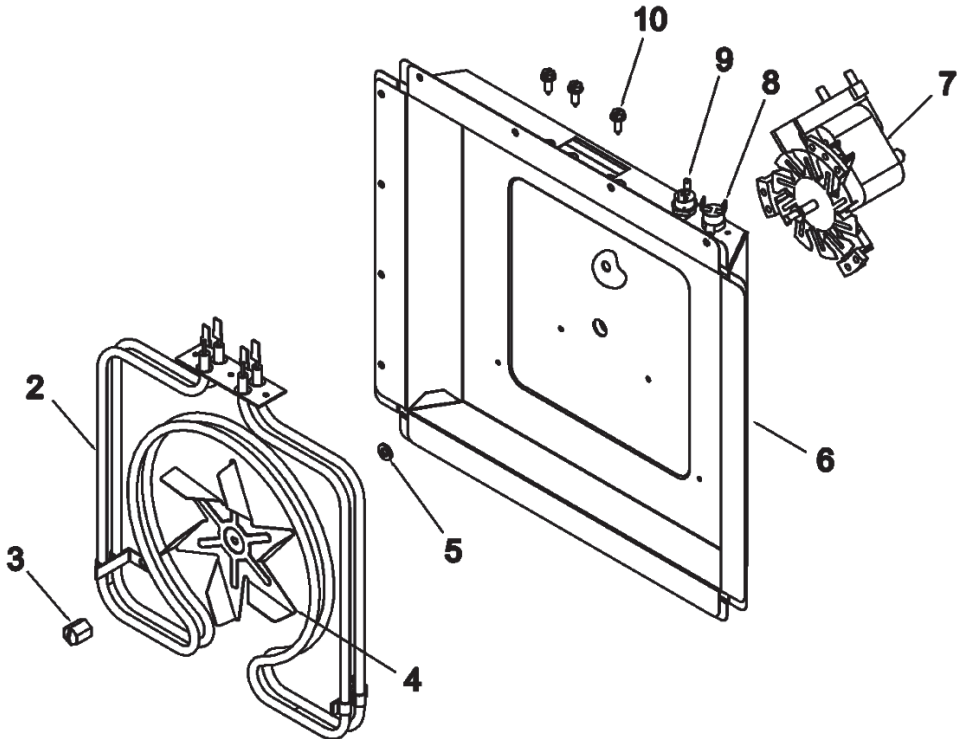

Зип Общепит
vsezip.ru
+7(812)987-08-81

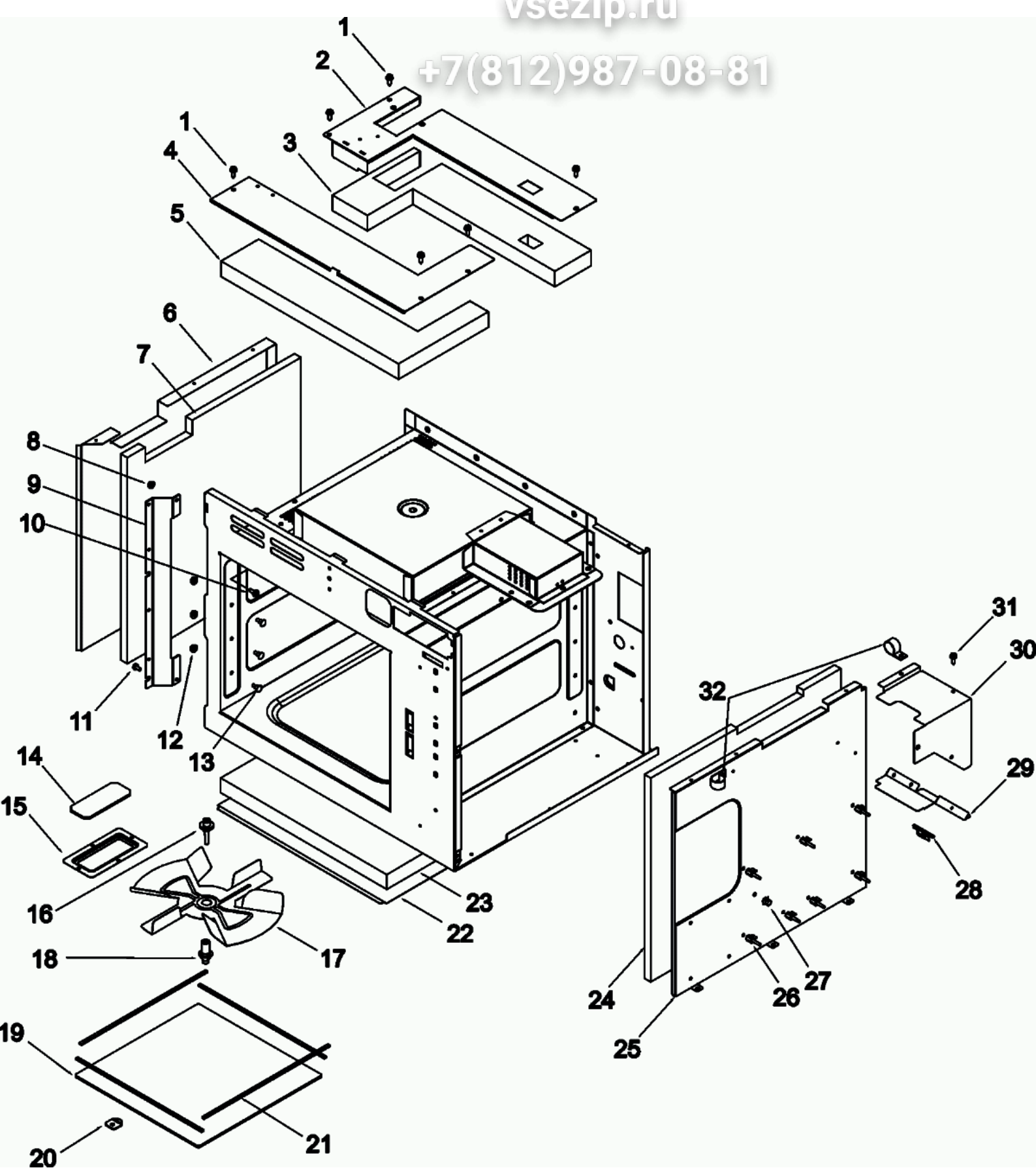

Seite	Pos	Kredtor Artikel Nr.	GB
001	001	10908901Q	WRAPPER- STAINLESS
001	002	M0104106	CLIP-CORD
001	003	12002804	ACCESS PAN WLD-E CT
001	004	M0216703	SCREW
001	005	M0216716	SCREW
001	006	10785608	COVER-LIGHT
001	006	M0215116	NLA- SCREW
001	006	M0288213	CLIP
001	007	M0249619	SCREW, T F
001	008	M0232002	SCREW, T F
001	008	10909001	TRIM
001	009	12523201Q	RACK GUIDE ASSY
001	010	12487402	RACK, OVEN
001	011	R0150116	NLA- BASE PAN & GASKET ASSY
001	012	59001646	GASKET, BASEPAN- CUT
001	013	59001647	GASKET, BASEPAN- CUT
001	015	M0216703	SCREW
001	015	10782402	BOTTOM ACCESS-E CT
001	016	10853102	GRILLE-AIR INLET
001	016	M0274066	WASHER-NYLON
001	016	M0209701	SCREW, DECORATIVE
001	017	M0220417	SCREW
001	018	M0275408	SEALER, RTV 10.3 OZ-RED-OV CAV
002	001	59001511	DOOR, OUTER
002	002	12474902	INSULATION, DOOR- LARGE
002	003	12474901	INSULATION, DOOR- SMALL
002	004	R0000498	KIT, INNER DOOR W\CAPS & CHOKE
002	005	59001512	HINGE, DOOR
002	006	12490902	HANDLE-DOOR
002	007	12576901	INSERT-HANDLE
002	008	M0295501	CAP, SCREW
002	009	5145-E	#8 AB X 1/2" CROW FOOT HD SCR
002	010	M0295502	WASHER-CAP SCREW
002	011	M0229716	SCREW
002	012	12360703	PLUG-HOLE
002	013	M0208943	SCREW, SET
002	014	M0208342	SCREW, SET
002	015	M0310305	PLUG-WHITE BUTTON
002	016	59001721	SPRING, LATCH
002	017	59001230	COVER, HINGE- GRAY
002	017	59001322	SCREW, TF
002	018	92113P01	BIT, CROWS FOOT DRIVER
003	001	59001208	SCREW, HEX HEAD
003	001	R0000280	TOUCH PANEL ASSY- TOP
003	002	M0234114	NLA- SCREW
003	002	12502401	BOARD, DISPLAY
003	003	59001208	SCREW, HEX HEAD
003	003	R0000279	TOUCH PANEL ASSY- SIDE
003	004	12002647	KIT, INTERLOCK SWITCH
003	004	M0216517	SCREW
003	005	R0157373	KIT, TRIAC
003	006	M0216716	SCREW
003	007	10172901Q	SNUBBER ASSY
003	008	M0287001	NUT, SPEED
003	009	B8383102	DIODE
003	009	59001208	SCREW, HEX HEAD
003	010	12548813	CAPACITOR- 1.30
003	011	A4055406	STRAP, CAPACITOR
003	011	59001208	SCREW, HEX HEAD
003	012	12018101	DUCT, MAG/WVGD
003	012	12991101	SCREW-SM/KNIFE RoHS
003	013	B5684119	THERMAL CUTOUT
003	014	10999501	NLA- BRKT-TCO MTG
003	014	M0229916	SCREW-TC
003	015	59001484	MAGNETRON
003	016	12991101	SCREW-SM/KNIFE RoHS
003	016	12492202	RELAY
003	017	12559101Q	BOARD, HV/LV
003	019	10788609	TRANSFORMER, HV 230V 50 HZ

Зип Общепит
vsezip.ru
+7(812)987-08-81

Seite	Pos	Kredtor Artikel Nr.	GB
003	020	M0571001	BUSHING-SNAP
003	021	M0216716	SCREW
003	022	M0216703	SCREW
003	023	12002901	FLUE DUCT WELD
003	023	M0216716	SCREW
003	024	M0282005	NUT-KEPS
003	024	12000201	SENSOR, TEMP
003	024	M0232002	SCREW, T F
003	025	B5684102	CUTOUT-THERMAL
003	026	A3293501	NLA- BUSHING-SNAP
003	027	M0216716	SCREW
003	027	12630501	NLA- LAMP COVER WELD
003	028	B8376701	BRKT-LIGHT
003	028	M0216515	SCREW
003	029	M0216616	SCREW
003	029	B8376801	SOCKET-LIGHT
003	030	67002552	BULB, LIGHT (40W-250V)
004	001	M0216716	SCREW
004	002	M0234422	SCREW
004	002	12000108	HEATER ASSY
004	003	12538001	NUT-CAP
004	004	12537901	BLADE, FAN
004	005	12546101	WASHER
004	006	59001513	HEATER BOX
004	006	12990511	SCREW
004	007	M0229616	SCREW-SM
004	007	12537803	MOTOR-CONVECTION
004	008	B5684123	THERMAL CUTOUT
004	009	B5684102	CUTOUT-THERMAL
004	010	M0223328	SCREW
004	011	B5706704	BLADE, FAN
004	012	M0253916	NLA- SCREW
004	012	10773308	MOTOR-BLOWER
004	013	10797203	SCROLL WELD
004	013	59001208	SCREW, HEX HEAD
004	014	C3670809	WHEEL-BLOWER
004	015	M0216716	SCREW
004	015	10977801	TRANSITION-BLOWER
004	016	M0216616	SCREW
004	016	12136503	BLOCK-1 POLE FUSE
004	017	M0805102	FUSE-15A
004	018	M0571003	BUSHING-SNAP
004	019	M0216716	SCREW
004	019	12000812	NLA- BLOWER BRKT WELD
004	020	B5669025	POWER CORD
004	021	M0370009	RELIEF-STRAIN
004	022	M0216515	SCREW
004	022	10091101	BLOCK-FUSE
004	023	M0805203	FUSE-20A
004	024	12991101	SCREW-SM/KNIFE RoHS
004	024	B5677203	BLOCK-TERMINAL
004	025	12130001	FILTER-LINE
004	025	A4539618	NLA- RIVET, .156 POP
005	001	M0216716	SCREW
005	002	10977401	RETAINER-TOP/BACK INSUL
005	003	12000701	INSUL-TP BACK
005	004	10978002	RETAINER-TOP INSUL
005	005	12000702	INSUL-TP FT
005	006	10977301	RETAINER-INSUL L
005	007	12000501	INSUL-L PAN
005	008	M0282005	NUT-KEPS
005	009	12189004	BRKT-HINGE SUPPORT
005	010	M0213802	SCREW-SM
005	011	59001208	SCREW, HEX HEAD
005	012	M0282007	NUT
005	013	12030101	BOLT-SHOULDER
005	014	12047501	NLA- GLASS-OVEN LIGHT
005	015	M0213802	SCREW-SM
005	015	10978201	NLA- RETAINER-LT GLASS

Зип Общепит
vsezip.ru
+7(812)987-08-81

Seite	Pos	Kredtor Artikel Nr.	GB
005	016	12004401	SHAFT-STIRRER
005	017	10825904Q	BLADE, STIRRER
005	018	R0130737	KIT, STIRRER BLADE
005	019	R0150115	COVER, STIRRER
005	020	12188901	RETAINER-TRAY
005	020	M0213802	SCREW-SM
005	021	12019002	GASKET
005	022	10977501	RETAINER-BTM INSUL
005	022	M0220417	SCREW
005	023	12000703	INSUL-CAVITY
005	024	12000401	INSUL-R PAN
005	025	M0220417	SCREW
005	025	59001652	RETAINER, SIDE INSUL RT
005	026	5043-W	#6 F X 1/4" SCREW (25)
005	026	M0590602	SUPPORT
005	027	M0585507	NLA- SUPPORT
005	028	M0104106	CLIP-CORD
005	029	10978601	DUCT-BLOWER/MAG
005	029	M0216716	SCREW
005	030	10978702	NLA- COVER, MAG INLET
005	031	M0216515	SCREW
005	032	12991101	SCREW-SM/KNIFE RoHS
		12543201	HARNESS, HVB/DISPLAY BOARD
		59001635	HARNESS, INTERLOCK/DISPLAY BD
		12004302	NLA- HARNESS, OVEN LAMP
		59001658	NLA- HARNESS, WIRE
		D7726534	NLA- WIRE, HV
		12026901	NLA- WIRE, HV
		92113P01	BIT, CROWS FOOT DRIVER
		M0275408	SEALER, RTV 10.3 OZ-RED-OV CAV
		59001516	NLA- FLAT SHEET
		59001517	SEE BULLETIN TCM-0023A-B
		59001518	NLA- FRY BASKET
		59001520	NLA- CAVITY CLEANER

Зип Общепит
vsezip.ru
+7(812)987-08-81
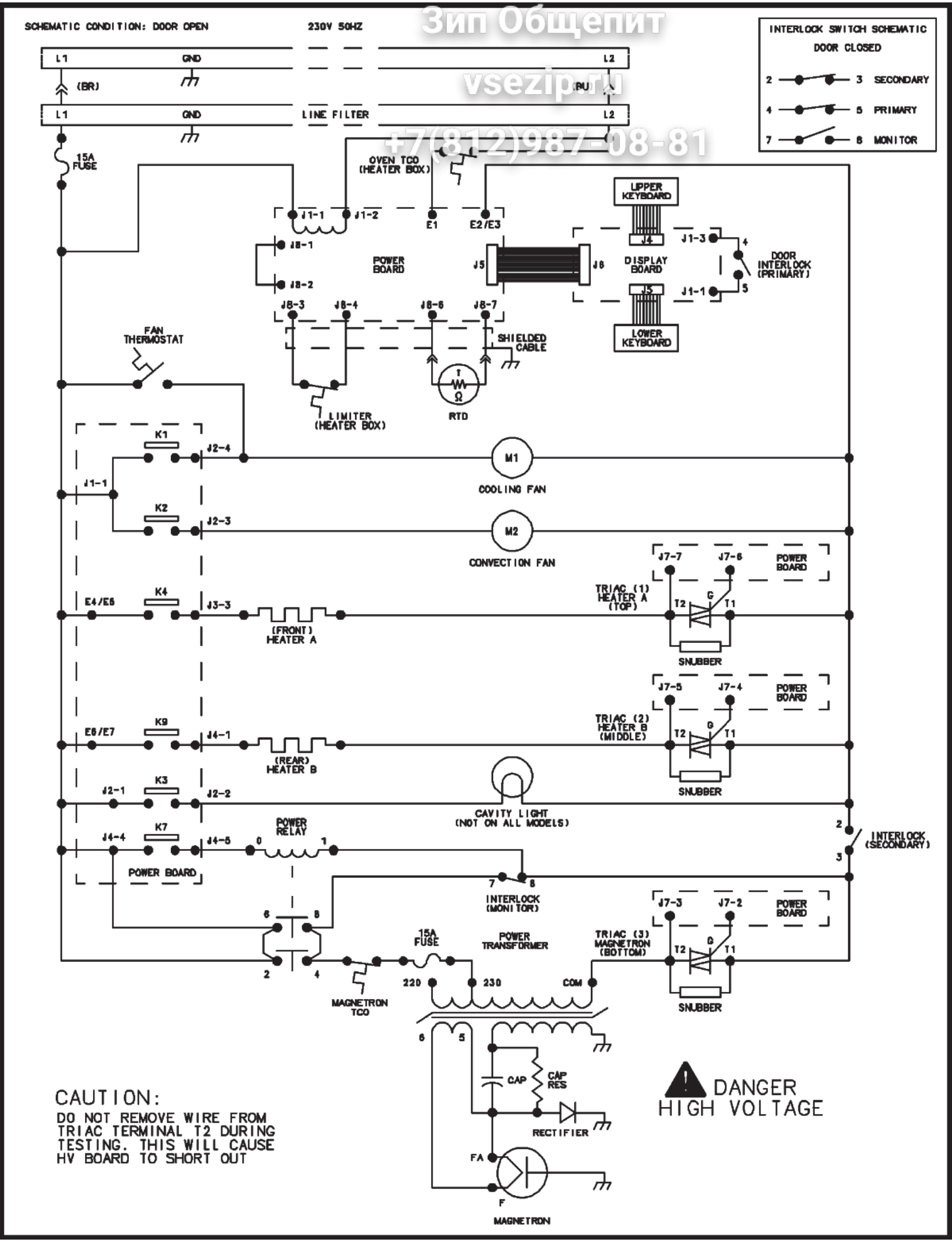
Зип Общепит
vsezip.ru
+7(812)987-08-81