BLOWER / INTERLOCK

Зип Общепит
vsezip.ru
+7(812)987-08-81

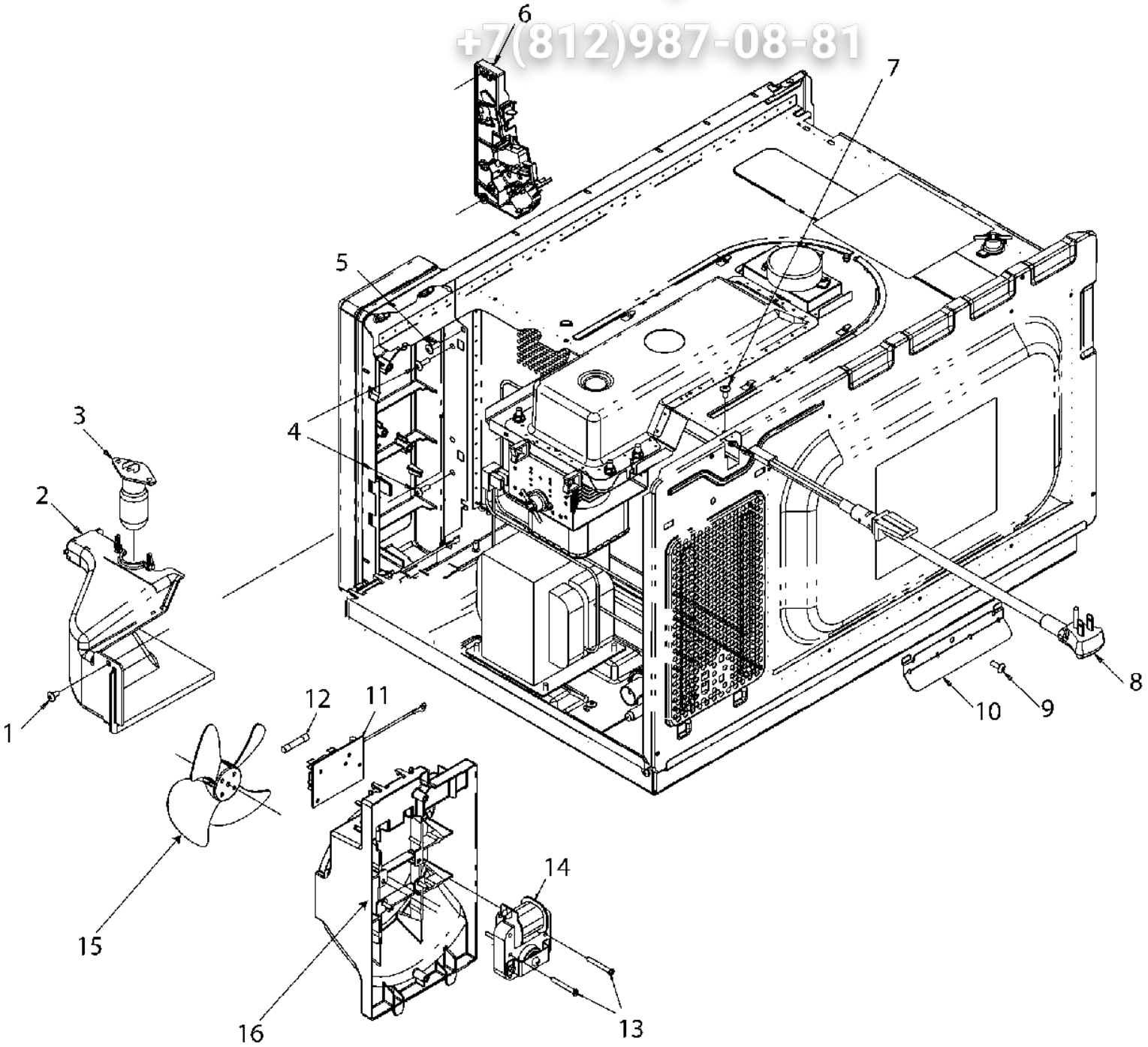

DOOR

ЗипСобщепит
vsezip.ru
+7(812)987-08-81

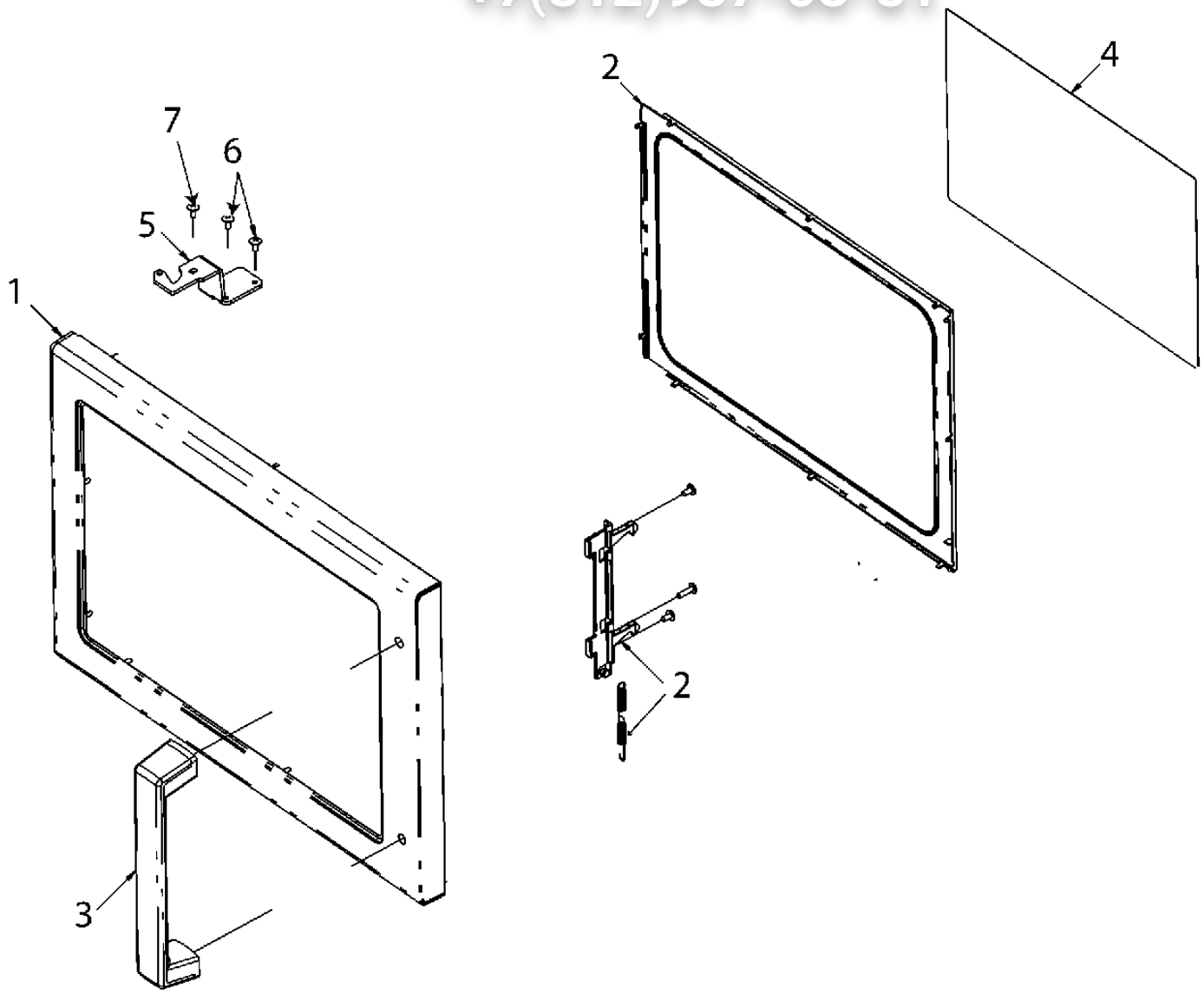

ELECTRONIC CONTROL

Зип Общепит
vsezip.ru
+7(812)987-08-81

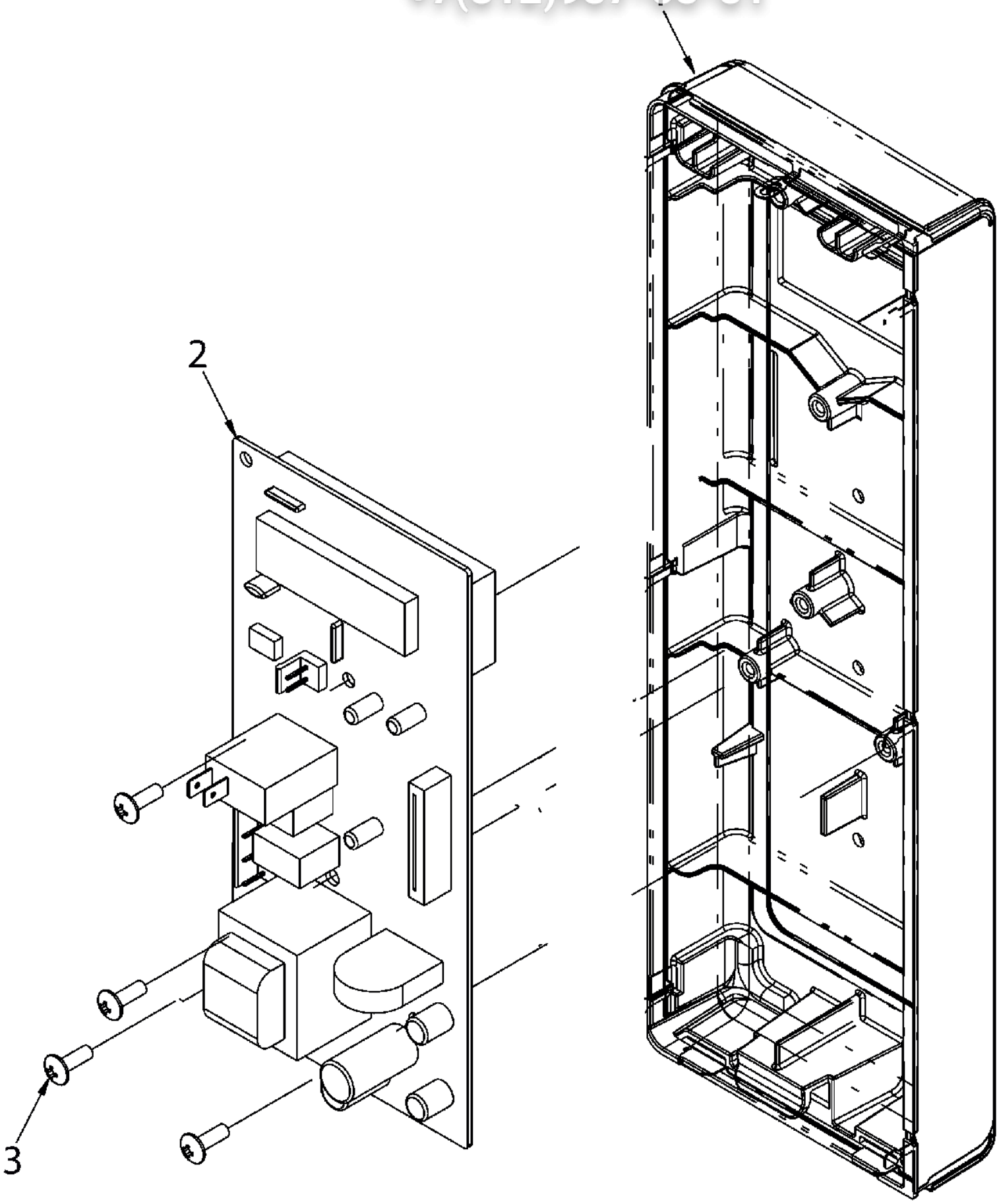

OVEN CAVITY

Зип сообщепит
vsezip.ru
+7(812)987-08-81

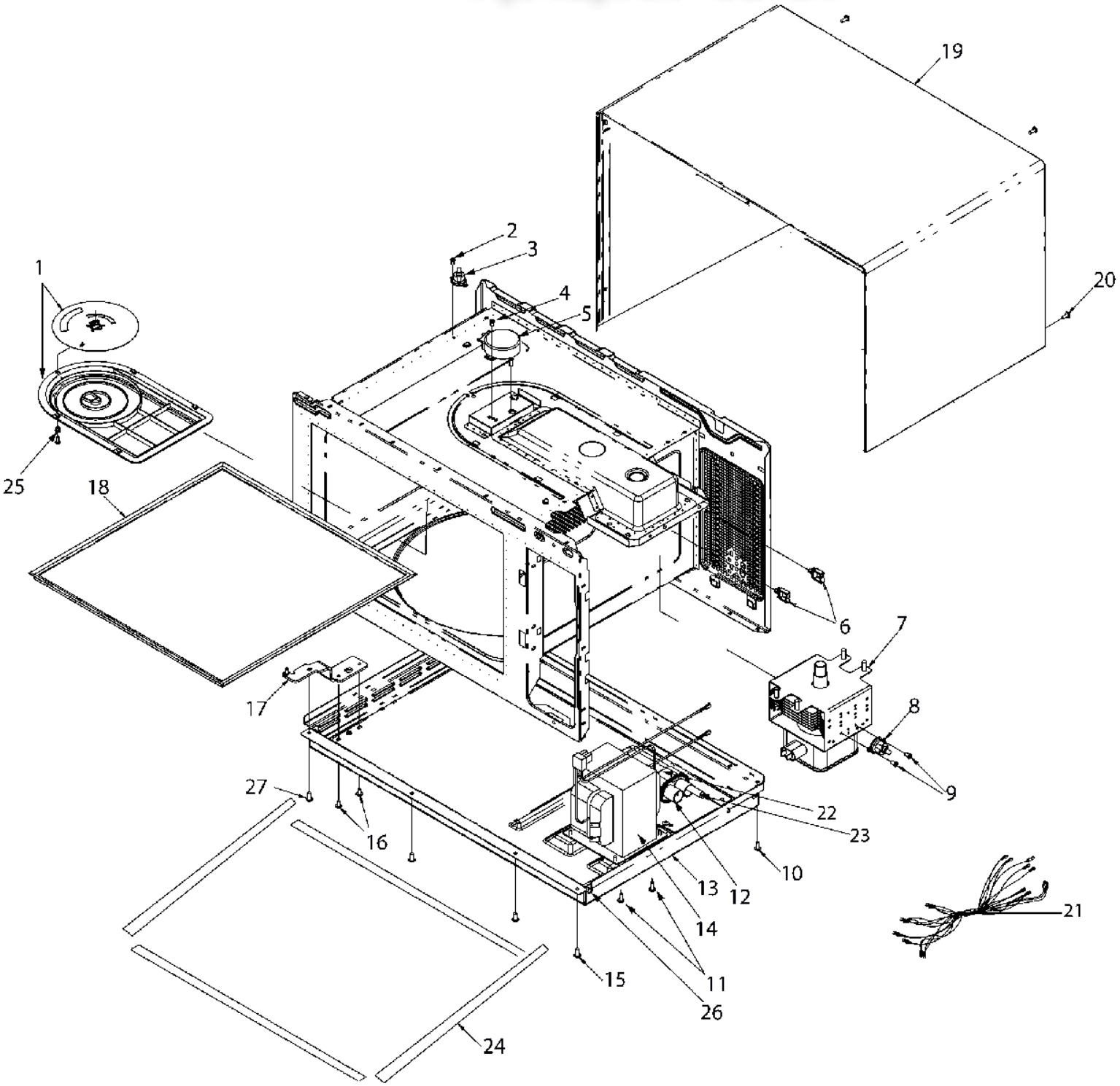

Seite	Pos	Kredtor Artikel Nr.	GB
001	001	54116017	SCREW
001	002	54127039	DUCT, AIR
001	003	54127049	LAMP/SOCKET ASSY
001	004	54116017	SCREW
001	005	54116017	SCREW
001	006	54127009	SWITCH, INTERLOCK ASSY
001	007	54116017	SCREW
001	008	54127048	POWER CORD
001	009	54116017	SCREW
001	010	54127040	BRKT, INLET AIR
001	011	54127068	FUSE BLOCK/FILTER ASSY
001	012	20034003	FUSE, 20 A
001	013	54127065	SCREW
001	014	54127056	MOTOR, BLOWER & BLADE
001	015	56112070	BLADE, FAN
001	016	54127059	BRKT, BLOWER
002	001	54127022	DOOR ASSY- MM
002	002	14124068	KIT, SPRING/LATCH/CHOKE COVER
002	003	14124069	KIT, DOOR HANDLE
002	004	54127026	WINDOW, INNER
002	005	54127028	HINGE, UPPER
002	006	54127061	SCREW
002	007	54127064	SCREW
002	008	54127063	SCREW
003	001	54127005	ESC/TOUCH PANEL ASSY
003	002	54127033	BOARD, HV/LV
003	003	54127067	SCREW
004	001	12002625	KIT, COVER/STIRRER BLADE/RIVETS
004	002	54127062	SCREW
004	003	54127037	THERMAL CUTOUT, CAVITY
004	004	54127062	SCREW
004	005	56002013	MOTOR, ANTENNA
004	006	B5667304	CLIP-WIRE
004	007	14114048	KIT, MAGNETRON
004	008	54127038	THERMAL CUTOUT, MAG
004	009	54116025	SCREW
004	010	54127064	SCREW
004	011	54127061	SCREW
004	012	54127015	CAPACITOR, 1.05
004	013	54127001	BASEPAN ASSY
004	014	54127011	TRANSFORMER, HV
004	015	54127064	SCREW
004	016	54127061	SCREW
004	017	54127029	HINGE, LOWER
004	018	54127018	TRAY, CERAMIC
004	019	54127045	WRAPPER
004	020	54127064	SCREW
004	021	54127042	HARNESS, MAIN
004	022	53001724	BRACKET, CAPACITOR, BACK
004	023	20036801	DIODE, SLEEVED
004	024	R0000413	GASKET, BASEPAN - 90 in (228 cm)
004	025	54116064	RIVET ASSY
004	026	54116021	SCREW
004	027	54127066	SCREW

Зип Общепит
vsezip.ru
+7(812)987-08-81

WIRING DIAGRAM
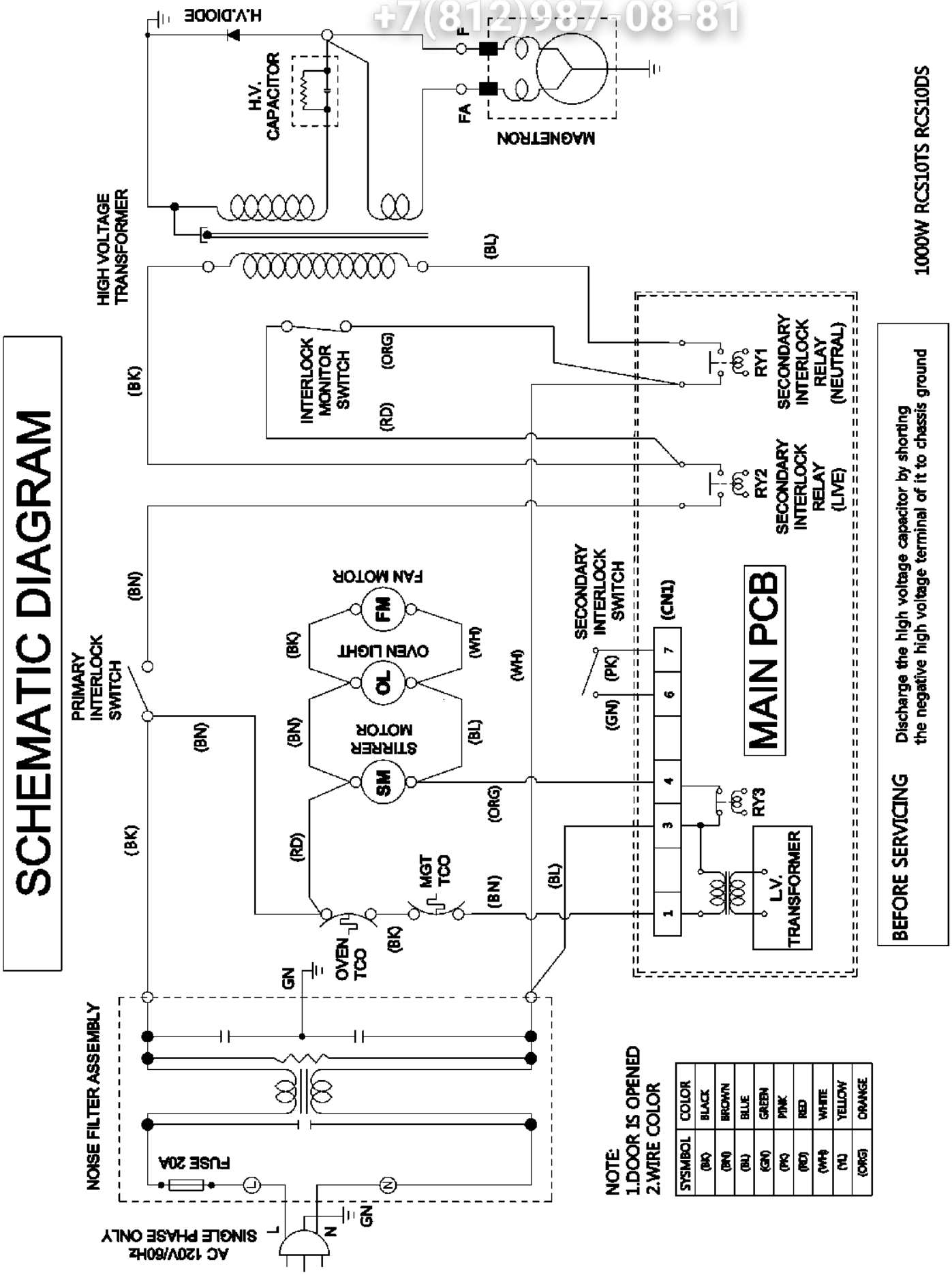
Электронный компонент
vsezip.ru
+7(812)987-08-81